Jøtul F 100 ECO.2

Jøtul F 100 ECO.2
EN 16 510
Manual Version P00

UK - Installation and operating instructions 3

FR - Manuel d'installation et d'utilitation 22

ES - Instrucciones para montaje e instalación 41

IT - Manuale di installazione ed uso 59

NL - Installatie- en montagehandleiding 78

DE - Montage- und Gebraucsanleitung 96



Jøtul F 100 ECO.2 LL



Jøtul F 100 ECO.2 LL SE



Jøtul F 100 ECO.2 SL



Jøtul F 100 ECO.2 SL SE

Manualen må oppbevares under hele produktets levetid. Manualen skal opbevares under hele produktets levetid. Manualen skall sparas under hela produktens levtid. Käyttöohje on säilytettävä tuotteen koko käyttöiän ajan.

EU no. 2015/1186 - 24/04/2015

Datasheet / Fiche Technique / Ficha técnica / Scheda dati / Datenblatt / Dane techniczne

Requirements / Exigences / Requisitos / Requisiti / Vereisten / Forderungen / Wymagania	
Supplier / Fabricante / Fornitore / Vereisten / Lieferant/ Producent:	Jøtul AS
Product models Produits concernés Modelos Modelli Product modellen Varianten der Feuerstelle Modele produktu	**Jøtul F 100 ECO.2 LL, Jøtul F 100 ECO.2 LL SE, Jøtul F 100 ECO.2 SL, Jøtul F 100 ECO.2 SL SE**
Energy efficiency class / Classe énergétique / Clase de eficiencia energética / Classe energetica / Energie efficiëncy klasse / Energieeffizienz-Klasse / Klasa efektywnści energetycznej	A
Direct heat output / Puissance réelle de sortie / Potencia calorifica emitida / Emissione di calore diretta / Directe warmte afgifte / Nennwärmeleistung / Bezpośrednia moc grzewcza	4,9 kW
Energy efficiency index / Index de rendement énérgétique/ Índice de eficiencia energetica / Indice di efficienza energetica / Energie efficiëncy index / Energieeffizienz-Index / Indeks efetywności energetycznej	106,0
Efficiency at nominal heat output / Rendement à puissance nominale / Eficiencia al rendimiento nominal / Efficienza alla potenza nominale / Efficiency bij nominale warmte afgifte / Wirkungsgrad bei Nennheizleistung / Sparawność dla mocy znamionowej	80 %
• Any specific precautions that shall be taken when the local space heater is assembled installed or maintained. • Toutes les précautions spécifiques doivent être prises lors de l'assemblage, l'installation ou l'entretien de l'appareil. • Cualquier precaución específica que deba tenerse en cuenta durante el montaje, instalación o mantenimiento del equipo de calefacción • Precauzioni specifiche da prendere quando il riscaldatore viene assemblato, installato o mantenuto in uno spazio. • Eventuele specifieke voorzorgsmaatregelen die worden genomen wanneer de plaatselijke ruimteverwarming wordt gemonteerd, geïnstalleerd of onderhouden. • Besondere Maßnahmen bei Montierung, Installation und Wartung. • Waszelkie szczególne środki ostrożności, które należy podjać, gdy lokalny ogrzewacz pomieszczeń jest zamontowany lub konserwowany.	• Fire safety precautions such as safety distances when installing, national standards, local codes and regulations. See the Instructions manual. • Les précautions d'incendie telles que les distances de sécurité lors de l'installation, le suivi des normes, les codes locaux et les règlementations nationales. Veuillez lire le manuel d'installation. • Precauciones frente a incendios como distancia de seguridad en la instalación, estándares nacionales, códigos locales y reglamentos. Lea el manual de instalación. • Precauzioni per la sicurezza antincendio come le distanze di sicurezza durante l'installazione, le normative nazionali e locali. Leggere il manual. • Brandveiligheidsmaatregelen, zoals veiligheids-afstanden bij installatie, nationale normen, lokale codes en voorschriften. Lees de installatiehandleiding. • Für brenntechnische Verhältnisse, wie z.B. Aufstellbedingungen und nationale Forderungen. Siehe die Montage- und Bedienungsanleitung. Środki bezpieczeństwa przeciwpożarowego, takie jak odległości od materiałów palnych jakie należy zachować podczas instalacji, normy krajowe, lokalne przepisy i regulacje. Patrz instukcja obsługi..

UK - Installation and operating instructions

Table of contents

2.0 Technical Data……3

3.0 Safety……7

4.0 Installation……10

5.0 Daily use……15

6.0 Maintenance……17

7.0 Service……18

8.0 Operational problems - troubleshooting……20

9.0 Optional equipment……20

10.0 Recycling……20

11.0 Guarantee terms……20

2.0 Technical Data

Installation

- All local regulations, including those referring to national and European Standards as well as the information provided in this assembly and instruction manual need to be complied with when installing the appliance.
- When you install any kind of fireplace or stove, you must inform the local building and housing authorities. In addition you are obliged to have the installation inspected and approved by a local chimney sweep prior to the commissioning
- To ensure best possible functionality and safety for your installation, we advise you to call a professional fitter. Your Jøtul Dealer will be able to recommend a qualified fitter in your area. For information on Jøtul Dealers, please go to www.jotul.com

Safety

Any changed made to the product by the dealer, fitter or user could result in the product and safety functions not functioning as intended. The same applies to the fitting of accessories or extra equipment not supplied by Jøtul AS. This could also be the case if parts that are neccessary for the operation and safety of the stove are dismantled or removed.

This stove is produced in accordance with type approval for the product, which also covers the product's Assembly and Instruction Manual. Read and follow the user operating instructions carefully.

The Declaration of Performance (DoP) is available on www.jotul.com

Technical data

Test in compliance with EN 16510			
	Classification of appliance	Type B	
P_{nom}	Nominal heat output	4,9	kW
η_{nom}	Energy efficiency at nominal heat output	80	%
η_s	Seasonal space heating energy efficiency at nominal heat output	70	%
EEI	Energy efficiency index	106	
	Energy efficiency class	A	
	Fuel	Wood logs *	
	Fuel length, maximum	330	mm
	Fuel consumption	1,55	kg/h
	Amount of fuel	1,24	kg
	Amount of fuel, maximum	1,8	kg
CO_{nom}	CO emission at 13% O_2 at nominal heat output	0,11	%
		1345	mg/Nm^3
NO_{xnom}	NO_x emission at 13% O_2 at nominal heat output	85	mg/Nm^3
OGC_{nom}	OGC emission at 13% O_2 at nominal heat output	104	mg/Nm^3
PM_{nom}	Dust emission at 13% O_2 at nominal heat output	25	mg/Nm^3
p_{nom}	Flue draught at nominal heat output	12	Pa
	Recommended sub-pressure in the connecting piece	18-20	Pa
	Required combustion air supply	12,0	m^3/h
T_{snom}	Flue gas outlet temperature at nominal heat output	341	°C
T class	Chimney designation	T400 G	
$Ø_{f.g\ nom}$	Flue gas mass flow at nominal heat output	4,4	g/sec
V_h	Standing air loss	NPD	m^3/h
	Leakage before testing at gauge pressure of 5 Pa (1013 mbar, 27 °C)	2,61	Nm^3/h
	Leakage before testing at gauge pressure of 10 Pa (1013 mbar, 27 °C)	3,83	Nm^3/h
	Leakage before testing at gauge pressure of 15 Pa (1013 mbar, 27 °C)	5,16	Nm^3/h
CON/INT	Continuous operation (CON)/Intermittend operation (INT)	INT**	
	Reaction to fire classification	A1	
E, f	Power supply voltage, frequency	-	V

* Use only recommended fuels - designation I.

** Intermittent operation in this context means normal use of a wood-burning stove. In other words, you should let the fire die down until only the embers are left before refueling.

Technical Data

Basic technical data			
	Materials	Stainless steel Cast iron Ceramic stone/vermiculite Glass	
	Surface treatment	Senotherm	
	Smoke outlet	Top/Back	
d_{out}	Diameter of the flue gas outlet	150/125	mm
	Fresh air connection piece external diameter	none	mm
L	Overall dimensions (length)	445	mm
H	Overall dimensions (height)	658	mm
W	Overall dimensions (width)	528	mm
m	Mass (weight)	89	kg
m_{chim}	Maximum load of a chimney the stove may carry	120	kg

Minimum distances to combustible materials			
d_R	Rear (uninsulated flue pipe / insulated flue pipe / insulated flue pipe + extra shield plate)	400/300/100	mm
d_S	Sides (uninsulated / insulated flue pipe)	550/500	mm
d_C	Ceiling	750	mm
d_P	Front	1000	mm
d_F	Front to the bottom front radiation area (Long legs (LL)/Short legs (SL))	0/350	mm
d_L	Front to the side front radiation area	0	mm
d_B	Minimum distance below the bottom not regarding feet (Long legs (LL)/Short legs (SL))	217/157	mm
d_{non}	Minimum distances to non-combustible walls.	50	mm
	Corner	350	mm
	The code for insulated flue pipe	T400-N1-D-Vm-L50050-G100	

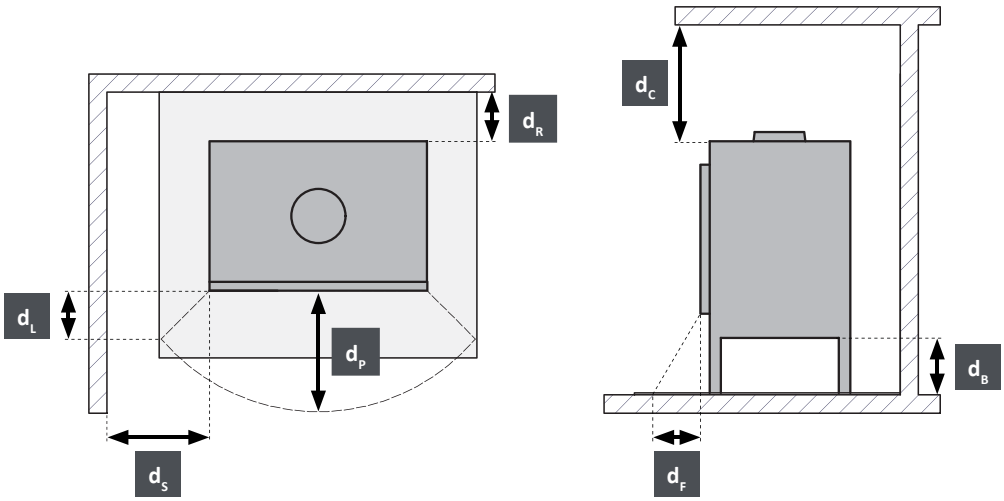

Approval Label

All Jøtul wood-burning stoves are fitted with an approval label that specifies the approval standards and the distance to combustible materials.

The approval label is located at the rear of the stove.
The approval label provides a pin and lot number. These numbers should be quoted when contacting your dealer or Jøtul AS and is required in the event of a complaint.

Approval Label

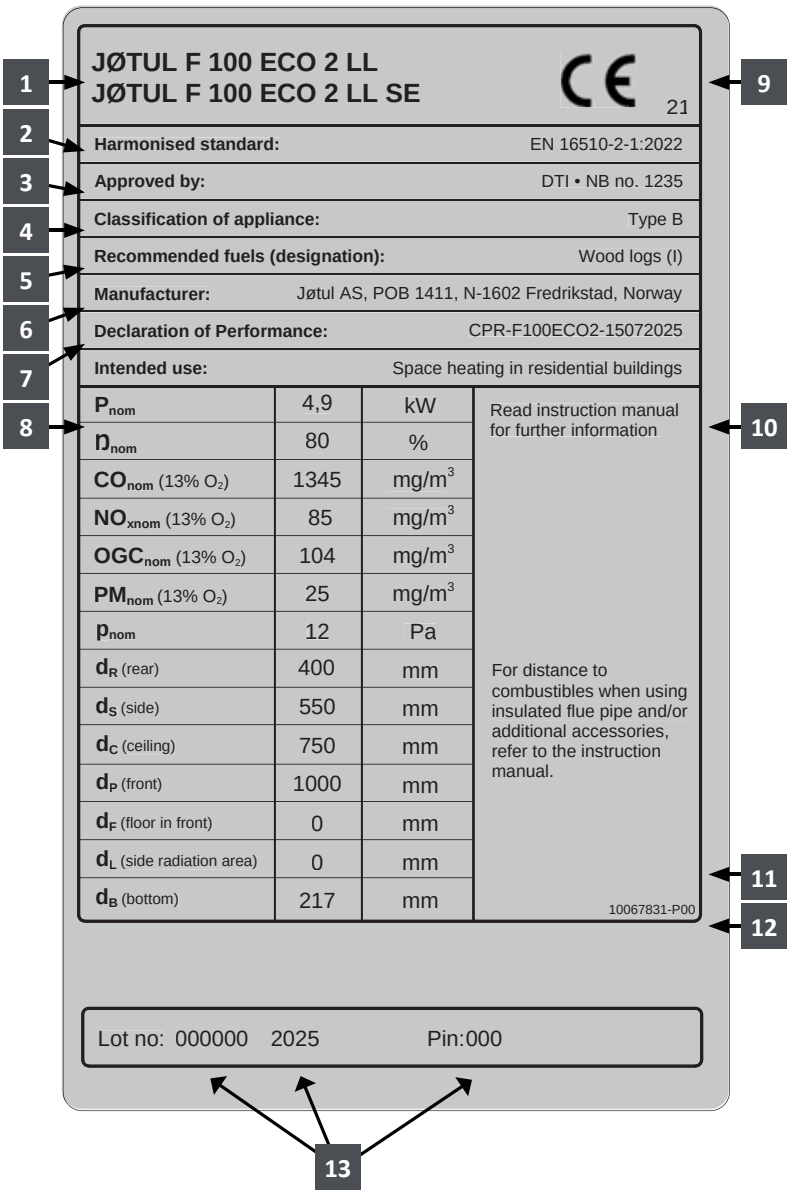

TYPE PLATE EXPLANATION

1. Type and/or the model number or designation to enable the appliance to be identified
2. Applicable standards
3. Name of test centre/certification number
4. Classification of appliance
5. Recommended fuels
6. Manufacturer's name and address
7. DOP document number
8. Table of values:

   P_{nom} - nominal heat output

   N_{nom} - energy efficiency at nominal heat output

   CO_{nom} - CO emission at 13% O_2 at nominal heat output

   NO_{xnom} - NO_x emission at 13 % O_2 at nominal heat output

   OGC_{nom} - OGC emission at 13 % O_2 at nominal heat output

   PM_{nom} - dust emission at 13 % O_2 at nominal heat output

   p_{nom} - flue draught at nominal heat output

   Minimum distances to combustible materials:

   d_R - back

   d_S - sides

   d_C - ceiling

   d_P - front

   d_F - front to the bottom front radiation area

   d_L - front to the side front radiation area

   d_B - below the bottom (not regarding feet)

9. CE mark of conformity- The digits indicate the year of issue of the certificate
10. Product specifications and instructions
11. Waste electrical and electronic equipment
12. Type plate number
13. Product registration number

3.0 Safety

NB! To guarantee optimal performance and safety, Jøtul recommends that its stoves are fitted by a qualified installer (see www.jotul.com for a complete list of dealers).

Any modifications to the product may result in the product and safety features not functioning as intended. The same applies to the installation of accessories or optional extras not supplied by Jøtul. This may also be the case if parts that are essential to the functioning and safety of the fireplace have been disassembled or removed.

In all these cases, the manufacturer is not responsible or liable for the product and the right to make a complaint becomes null and void.

The Clean Air Act

"The Clean Air Act 1993 and Smoke Control Areas"

Under the Clean Air Act local authorities may declare the whole or part of the district of the authority to be a smoke control area. It is an offence to emit smoke from a chimney of a building, from a furnace or from any fixed boiler if located in a designated smoke control area. It is also an offence to acquire an "unauthorised fuel" for use within a smoke control area unless it is used in an "exempt" appliance ("exempted" from the controls which generally apply in the smoke control area).

In England appliances are exempted by publication on a list by the Secretary of State in accordance with changes made to sections 20 and 21 of the Clean Air Act 1993 by section 15 of the Deregulation Act 2015. Similarly in Scotland appliances are exempted by publication on a list by Scottish Ministers under section 50 of the Regulatory Reform (Scotland) Act 2014.

In Northern Ireland appliances are exempted by publication on a list by the Department of Agriculture, Environment and Rural Affairs under Section 16 of the Environmental Better regulation Act (Northern Ireland) 2016.
In Wales appliances are exempted by regulations made by Welsh Ministers.

Further information on the requirements of the Clean Air Act can be found here: https://www.gov.uk/smoke-control-area-rules

Your local authority is responsible for implementing the Clean Air Act 1993 including designation and supervision of smoke control areas and you can contact them for details of Clean Air Act requirements.

The Jøtul F 100 ECO.2 SL, Jøtul F ECO.2 SL SE, Jøtul F 100 ECO.2 LL and Jøtul F 100 ECO.2 LL SE have been recommended as suitable for use in smoke control areas when burning wood logs.

The Jøtul F 100 ECO.2 SL, Jøtul F ECO.2 SL SE, Jøtul F 100 ECO.2 LL and Jøtul F 100 ECO.2 LL SE must be fitted with a permanent stop to prevent closure of the secondary air control beyond 40% open.

3.1 Fire Prevention Measures

There is a certain element of danger every time you use your fireplace. The following instructions must therefore be followed:

- The minimum safety distances when installing and using the fireplace are given in **fig. 1**. The specified distance to flammable materials, applies to this stove. The stove must be installed with a CE approved flue. The distance of the flue pipe to combustible materials must also be observed.
- Ensure that furniture and other flammable materials are not too close to the fireplace. Flammable materials should not be placed within 1000 mm of the fireplace.
- Allow the fire to burn out. Never extinguish the flames with water.
- The fireplace becomes hot when lit and may cause burns if touched.
- Only remove ash when the fireplace is cold. Ash can contain hot embers and should therefore be placed in a non-flammable container.
- Ash should be placed outdoors or be emptied in a place where it will not present a potential fire hazard.

In case of chimney fire:

- Close all hatches and vents.
- Keep the firebox door closed.
- Call the fire service.
- Before use after a fire an expert must check the fireplace and the chimney in order to ensure that it is fully functional

3.2 Glove

Use the protective glove when handling the product when it is hot.

3.3 Floor

Foundation

You need to make sure the foundation is suitable for a fireplace. See **"2.0 Technical Data"** for specified weight.

We recommend the removal of any flooring that is not attached to the foundation ("floating floors") beneath the installation.

Requirements for protection of wooden flooring beneath the fireplace

Jøtul F 100 ECO.2 SL (Short Legs) and Jøtul F 100 ECO.2 SL SE (Short Legs and Special Edition)

The short legged version (Jøtul F 100 ECO.2 SL) can only be installed on a constructional hearth which must have an extension of minimum 350 mm in front of the stove.

For further information please see: Approved Document J2010 Section 2.22.

Jøtul F 100 ECO.2 LL (Long legs):

Jøtul F 100 ECO.2 has a heat shield underneath which protects the floor from radiation. The product can therefore be placed directly on a wooden floor that is covered by a metal plate or other suitable, non-inflammable material. The recommended minimum thickness is 0,9 mm.

Floorplates **must comply with national laws and regulations.** Contact your local building authorities regarding restrictions and installation requirements.

Jøtul recommends that any flooring made of combustible material, such as linoleum, carpets, etc. should be removed from under the floor plate.

Requirements for protection of inflammable floors in front of the fireplace

The front plate must comply with national laws and regulations.

Contact your local building authorities regarding restrictions and installation requirements.

3.4 Walls

Distance to wall of flammable material - see fig. 1

The stove must be installed with a CE approved flue.
The distance of the flue pipe to combustible materials must also be observed.

Distance to combustible wall protected by firewall

See **fig. 1**

Distance to walls covered by a firewall

Firewall requirement

The firewall must be at least 100 mm thick and be made of brick, concrete-stone or light concrete. Other materials and structures with satisfactory documentation may also be used.

Non-combustible materials mean materials like brick, clinker, concrete, mineral wool, cilicate plates etc (materials that do not burn). **Note!** A short distance to non-combustible wall may lead to desiccation and discoloration of paint and cause cracking.

- The stove must be set up so that the stove itself, the flue pipe, and the chimney can all be cleaned.
- Make sure that furniture and other household items are not so close as to get dried up by the stove. Flammable materials should not be placed within 1000 mm of the fireplace.

3.5 Ceiling

There must be a minimum distance of **700 mm** to a combustible ceiling above the fireplace.

Fig. 1

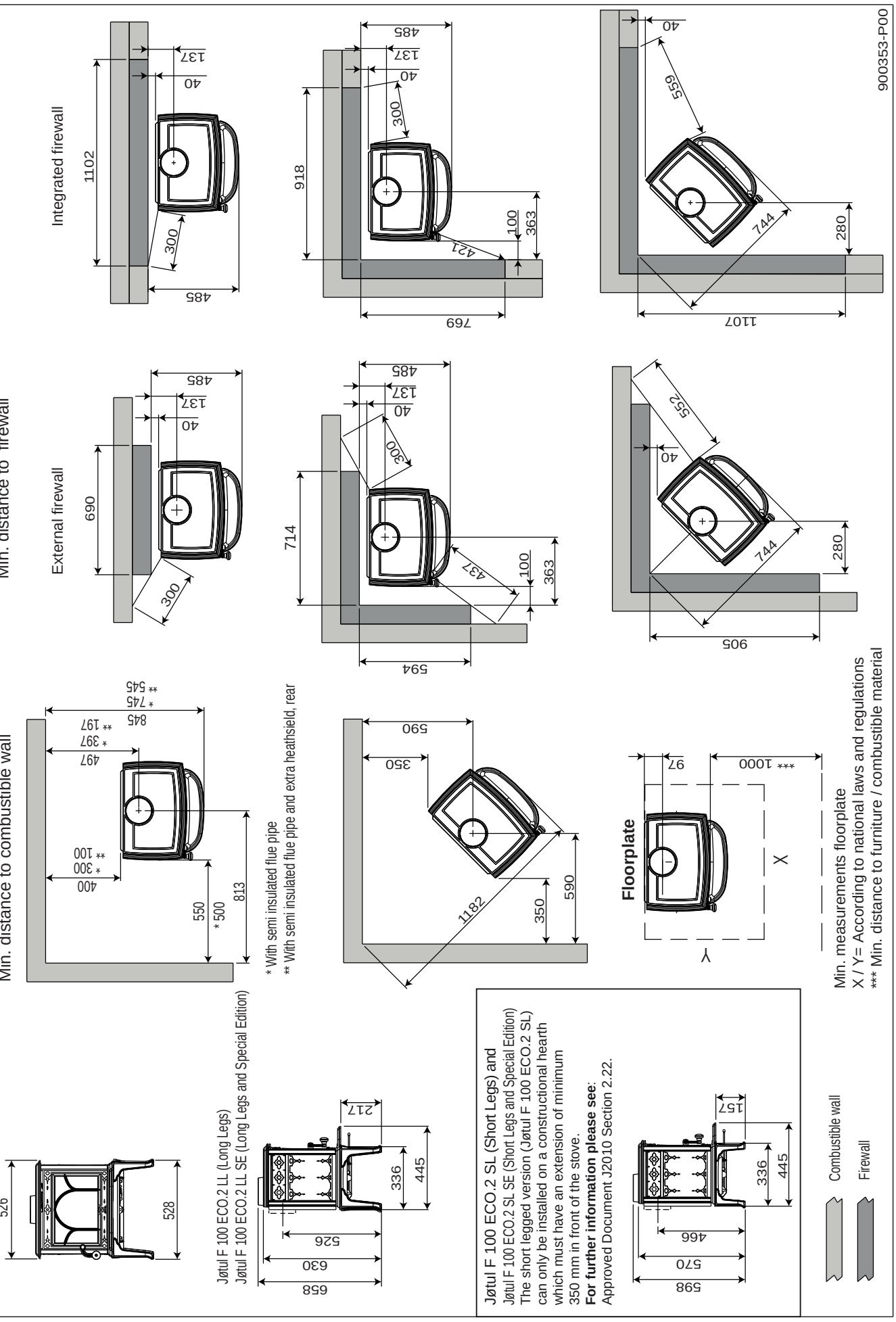
Jøtul F 100 ECO.2
Min. distance to firewall
Integrated firewall
1102
137
40
485
300
918
769
714
594
690
External firewall
Min. distance to combustible wall
845
497
400
550
813
* 500
* 300
** 100
* 397
** 197
* 745
** 545
590
350
1182
Floorplate
97
1000
***
X
Y
552
744
905
559
1107
280
526
528
Jøtul F 100 ECO.2 LL (Long Legs)
Jøtul F 100 ECO.2 LL SE (Long Legs and Special Edition)
217
336
445
526
630
658
* With semi insulated flue pipe
** With semi insulated flue pipe and extra heathsield, rear
Jøtul F 100 ECO.2 SL (Short Legs) and
Jøtul F 100 ECO.2 SL SE (Short Legs and Special Edition)
The short legged version (Jøtul F 100 ECO.2 SL)
can only be installed on a constructional hearth
which must have an extension of minimum
350 mm in front of the stove.
For further information please see:
Approved Document J2010 Section 2.22.
157
466
570
598
Min. measurements floorplate
X / Y= According to national laws and regulations
*** Min. distance to furniture / combustible material
Combustible wall
Firewall
900353-P00

4.0 Installation

- Before installing the fireplace, check it carefully for any signs of damage.
- The product is heavy! Ask someone to help you when positioning and installing it.
- **Ensure that air vents in the room where the fireplace is located are not blocked.**
- The stove must be installed in rooms with a good ventilation. A good ventilation is vital for the efficient operation of your stove.
- The appliance shall not be installed with ventilating systems which have pressure below -15 Pa.
- We recommend installing smoke detectors in the home.
- The distances specified in the manual only apply if you comply with the maximum amount of firewood. They only guarantee fire safety.
- There is no guarantee that the present building materials can withstand the temperature in relation to visual changes.
- Check that Building Regulations and any local by laws are followed during installation.

4.1 Prior to installation

- The standard product comes in one package
- When the product is unpacked, take out the ashlip, smoke outlet and bag of screws.

Fig. 3

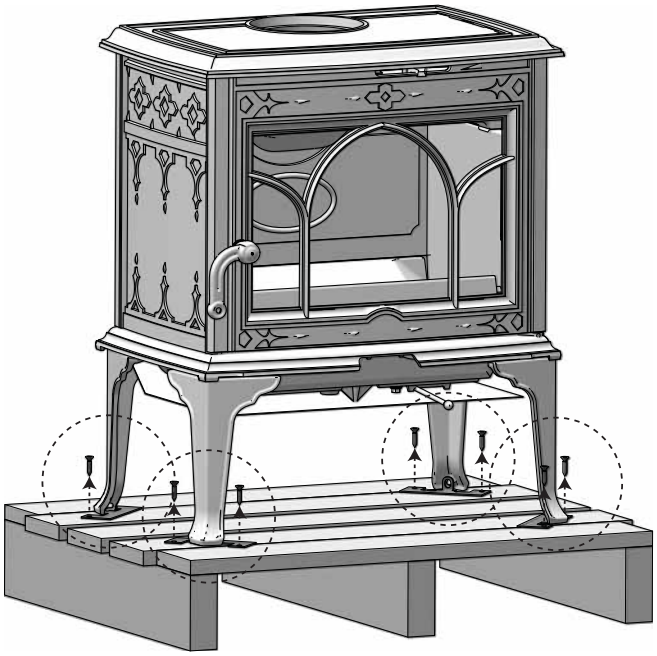

1. Remove the transport screws.

Requirement for UK

“The Jotul F 100 ECO.2 stoves have been recommended as suitable for use in smoke control areas when burning wood logs and when fitted with a mechanical stop to prevent primary air control closure less than 470 mm^2.

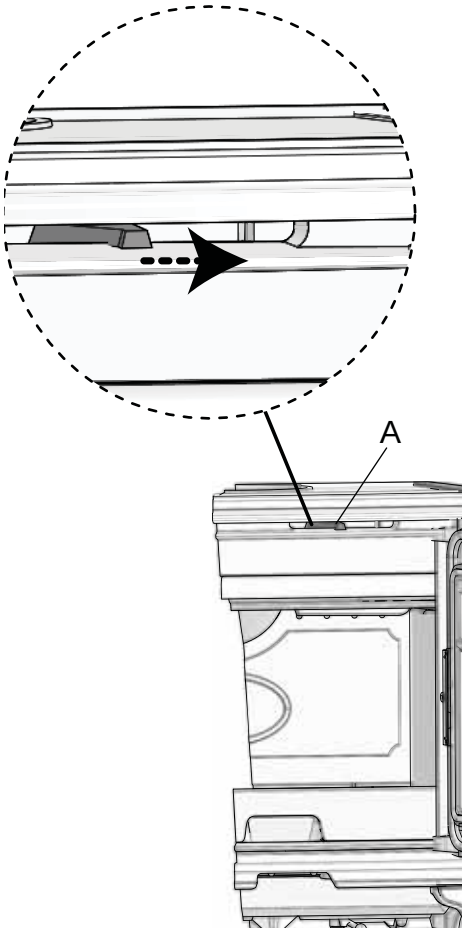

1. Push the air vent **(A)** to the right.

.

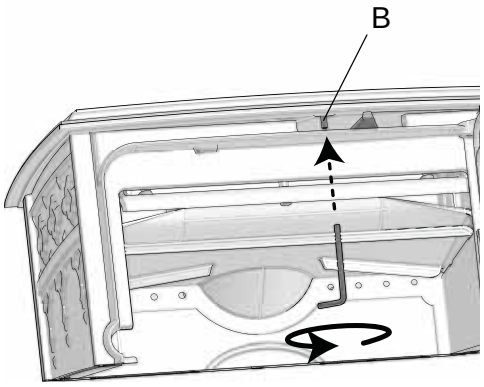

2. Use the pin screw **(B)** from the bag of screws and screw it onto the burnchamber.

4.2 Installation

Assembly of flue pipe with top outlet

The product is assembled for a top outlet as standard.

Fig. 4

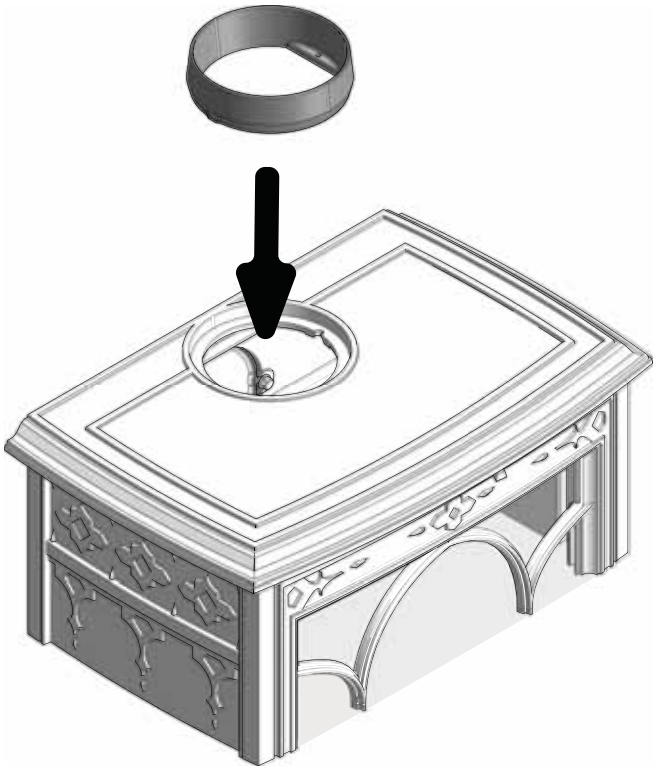

1. Attach the flue outlet to the top plate using the two screws.

Fig. 5

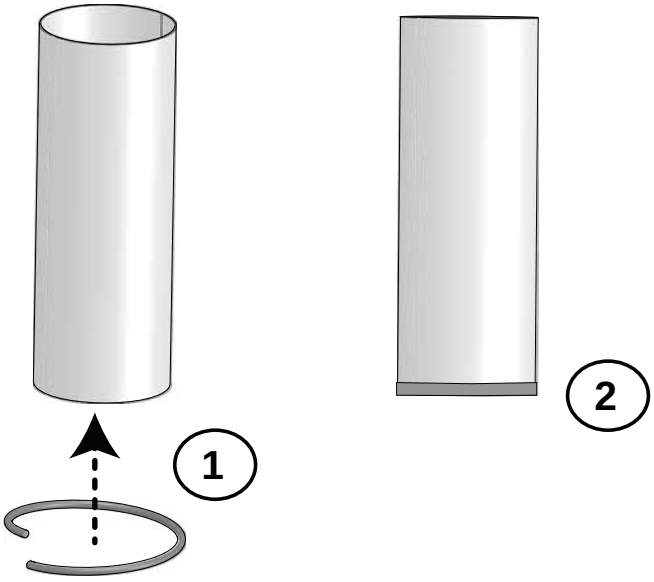

2. Remove the protective paper from the gasket and fasten it around the outside of the flue pipe.

Fig. 6

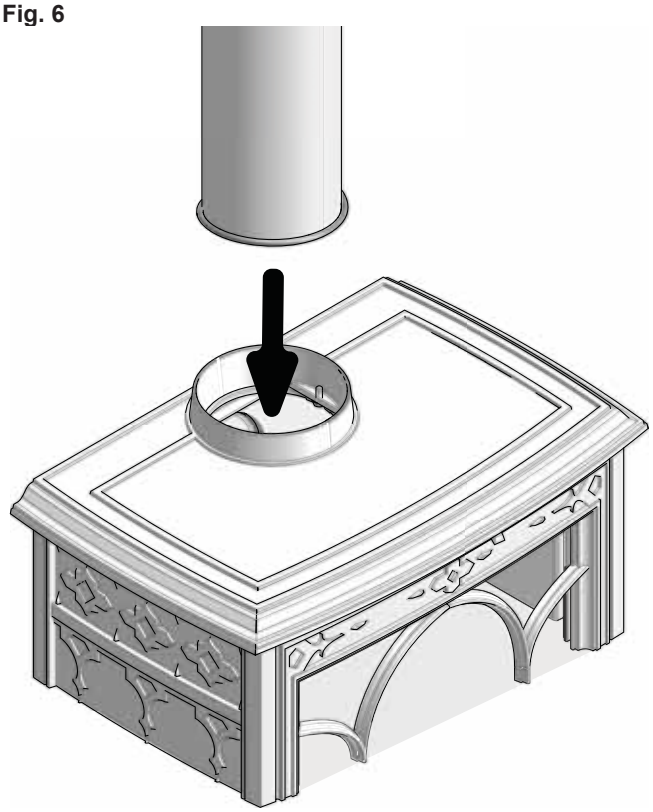

3. Install the flue pipe into the flue outlet.

Assembly of flue pipe with rear outlet

If the flue pipe is to be rear mounted do the following:

NB! In order to make the change, you must first remove the baffle plate - see fig. 23 - 24. Remember to put it in place later.

Fig. 7

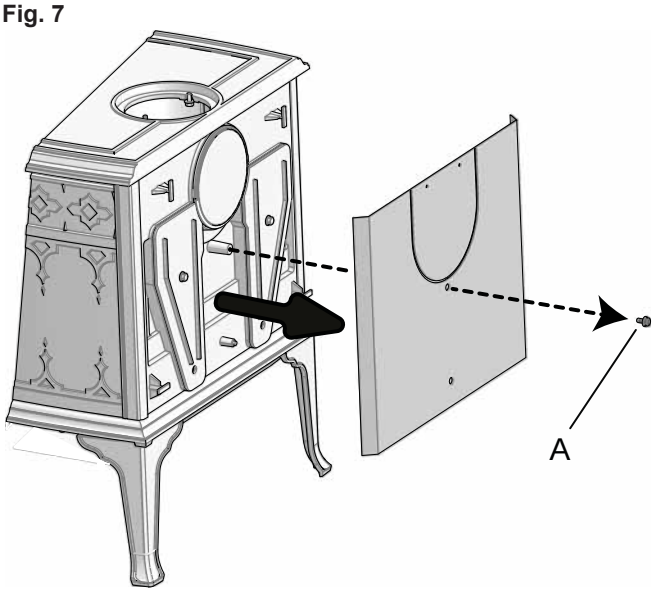

1. Unscrew the screw **(A)** and remove the rear heat shield.

Fig. 8

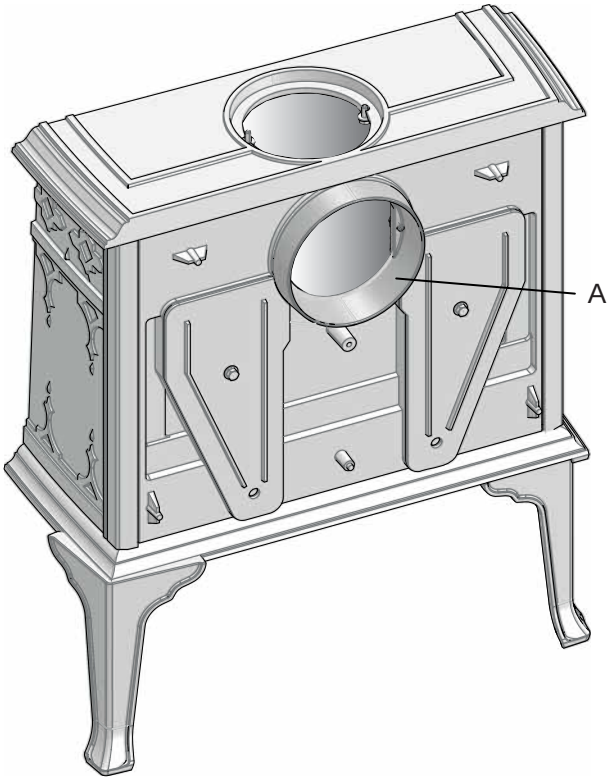

2. Mount the flue outlet **(A)** into the rear outlet.

Fig. 9

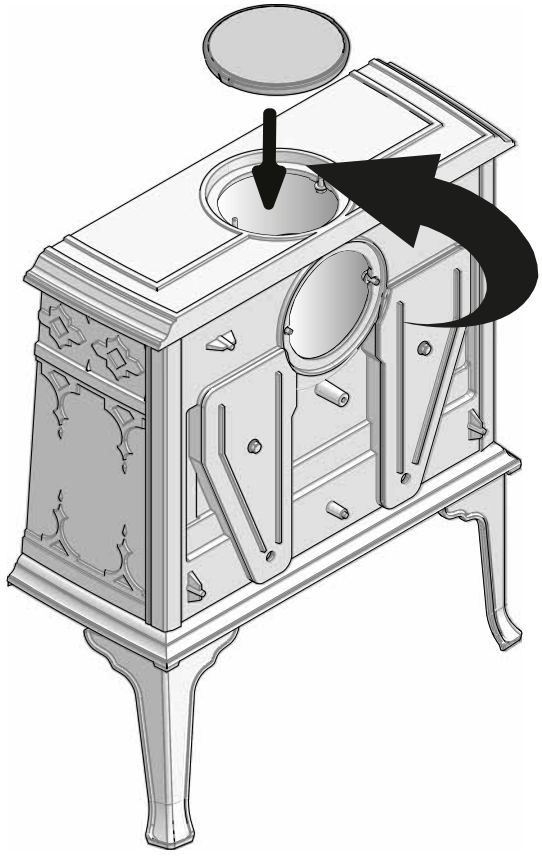

- Fasten the cover on the top plate.

Fig. 10

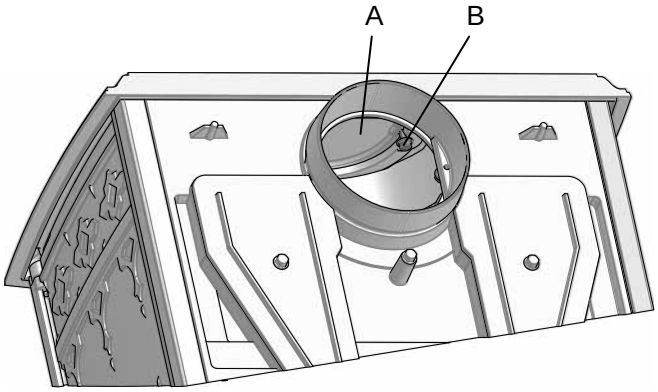

3. Fasten the cover **(A)** with the screws **(B)**.

Fig. 11

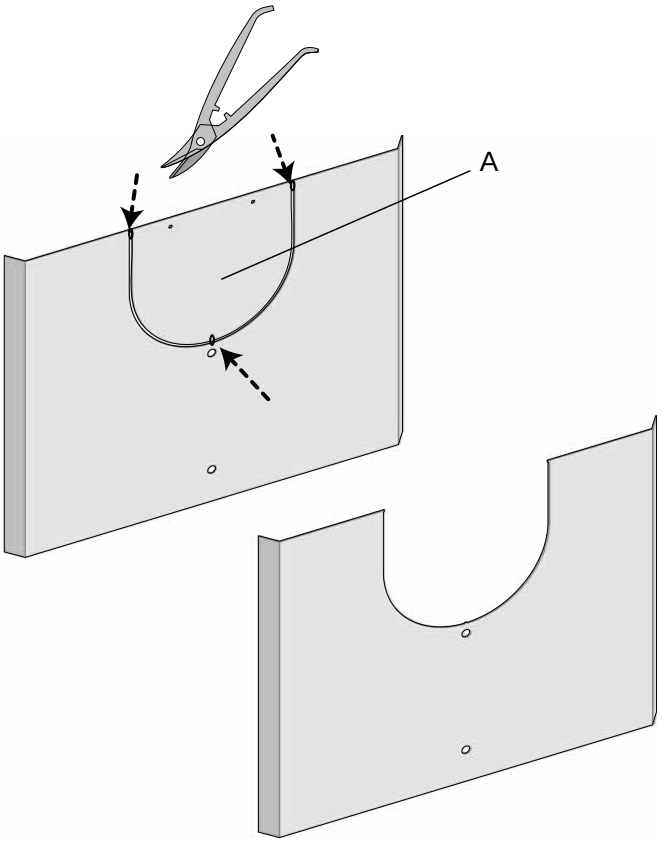

4. Cut out the part **(A)** in the heat shield for the flue pipe.

Fig. 12

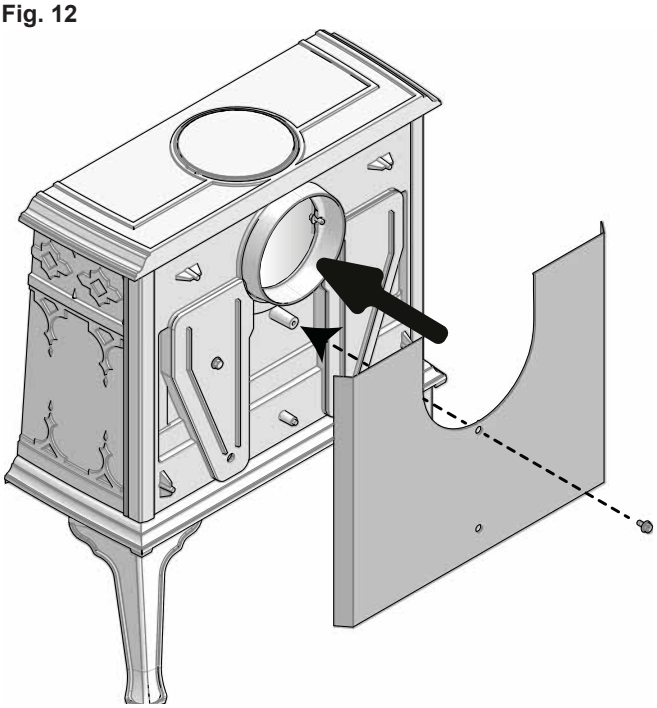

5. Install the rear heat shield onto the stove.

Fig. 13

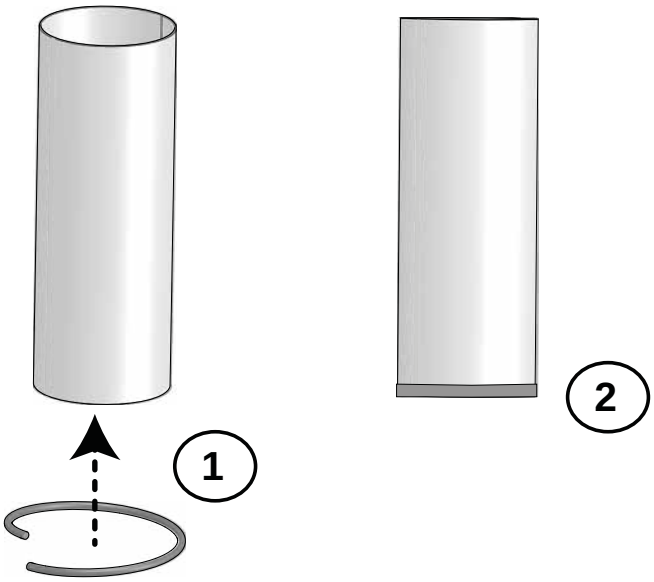

6. Remove the protective paper from the gasket and fasten it around the outside of the flue pipe.

Fig. 14

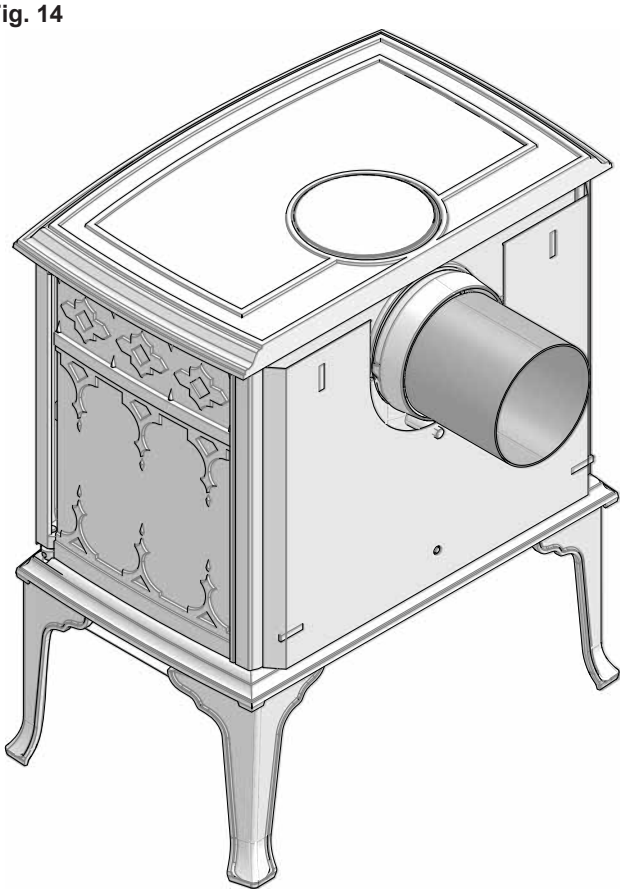

- Install the flue pipe into the flue outlet

Mounting the door knob

Fig. 15

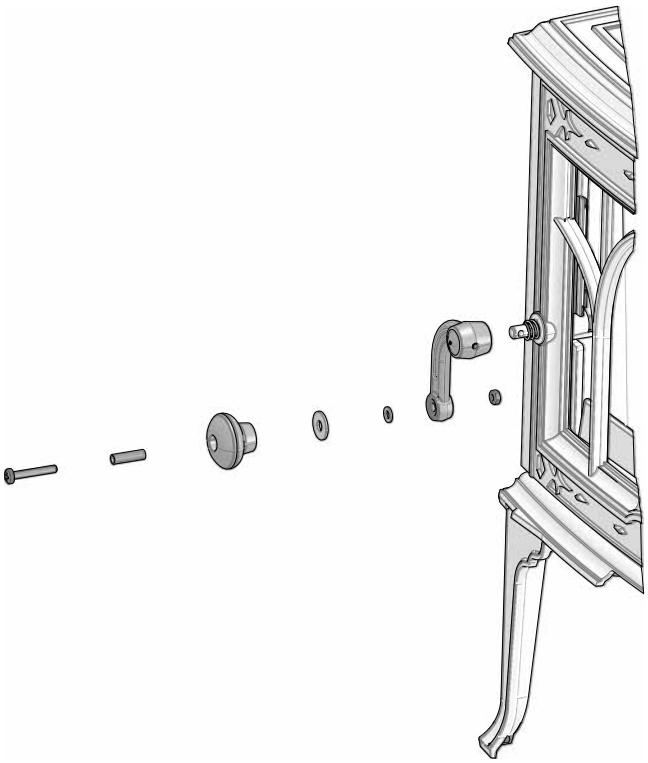

- Screw the door knob on the handle.

Installing the ash lip

Fig. 16

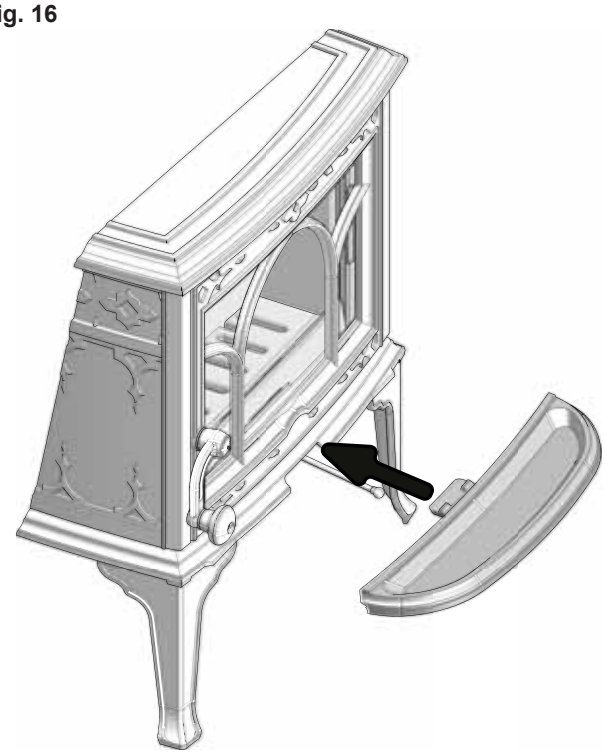

- Install the ash lip by hanging it under the door.

4.3 Chimney and flue pipe

- Several solid fuel stoves can be connected to the same chimney system if the chimney cross section is adequate and the door is self-closing. See 9.3. **NB: Look into the applicable rules and regulations to find out what is permitted.** Even a good chimney can function poorly if it is used incorrectly.
- The fireplace must only be connected to a chimney and flue pipe approved for solid fuel fireplaces with flue gas temperatures as specified in **«2.0 Technical Data»**.
- The specified distance to flammable materials, applies to this stove.
- The stove must be installed with a CE approved flue. The distance of the flue pipe to combustible materials must also be observed.
- Flue pipe bends with any change in direction influence / reduce the chimney draught. This effect also applies when horizontal flue pipes are used.
- The cross-section of the chimney must be designed to fit the fireplace. Use **«2.0 Technical Data»** to calculate the correct chimney cross-section.
- The chimney must be connected in accordance with the installation instructions of the chimney supplier.
- Before a hole is made in the chimney, the product should be test-mounted in order to correctly mark the position of the fireplace and the hole in the chimney. See **fig. 1** for minimum dimensions.
- With a rear outlet, use a flue pipe bend with a sweep hatch to allow sweeping.
- Please note that it is extremely important for connections to have a degree of flexibility. This is to prevent any movement in the installation leading to the formation of cracks.
- For recommended chimney draught, see **«2.0 Technical Data»**. For flue pipe dimension see **"2.0 Technical Data"**. **NB: The chimney's diameter must be at least just as big as the flue pipe.**
- When using a semi-insulated flue pipe (starter section), the part must at a minimum comply with class T 400-N1-D-Vm-L50050-G100. For installation requirements, see drawing.
- The function of the chimney and the flue pipe in terms of safety distances must be met. The chimney shall be proven according to EN 13384-2:2015+A1:2019 depending on the individual situation on site.

NB! The minimum recommended chimney length is 4,0 m from the flue pipe insert. If the draught is too strong, a flue pipe damper can be installed and used to reduce the draught.

4.4 Performance check

Once the product has been assembled, always check the control handles. These should move easily and work in a satisfactory manner.

The Jøtul F 100 ECO.2 is equipped with the following operating options:

Fig. 17

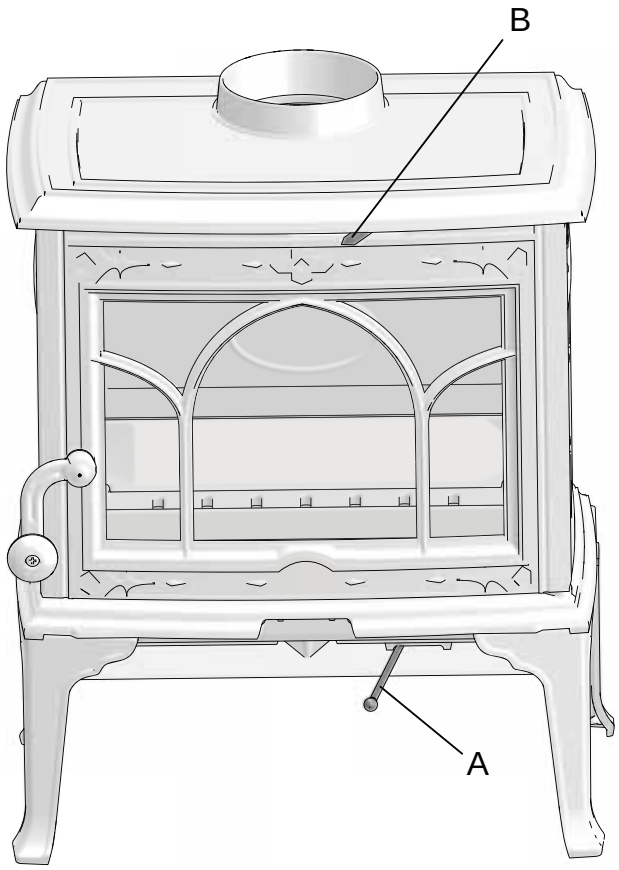

Ignition vent (A) - Air vent (B)

Pushed to the left: Closed
Pushed to the right: Open

4.5 Use

- Open both the air vent and the ignition vent by pushing them to the right. If necessary, keep the door slightly open. *(Use a glove, for example, as the handle can become hot.)*
- Place two medium sized logs in/out on each side of the base. **N.B**. In order to avoid sooting on the glass, it is important that the log is not placed adjacent to the glass on the product.
- Place firelighters or bark off the birch wood between the logs. Stack some finely split wood on top in a criss-cross pattern. Finally, place a medium-sized log on the top of the pile. Light the fire.
- Gradually increase the size of the fire, but the wood should not be stacked higher than the horizontal holes on the back burn plate**.**
- **NB: The maximum height of the pile of the wood should be just below the horizontal holes. The holes must not be covered.**
- Check that the afterburning (secondary combustion) starts. This is best indicated by yellow, flickering flames under the baffle.
- Then regulate the rate of combustion to the desired level of heating by adjusting the air vent **(fig. 30 A).**
- Close the stove door. It must always be closed when the fire is lit.
- Operation with the air control or appliance dampers open can cause excess smoke. The appliance must not be operated with air controls, appliance dampers or door left open except as directed in the instructions.
- Operation with the door open can cause excess smoke. The appliance must not be operated with the appliance door left open except as directed in the instructions.

Fig. 18

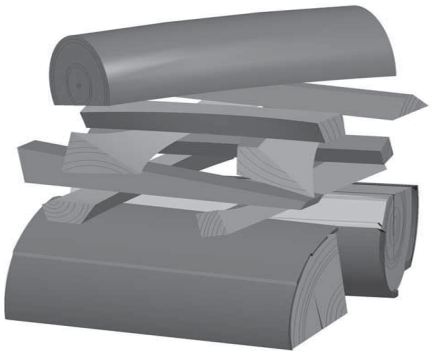

Adding firewood

Stoke the stove frequently but only add small amounts of fuel at a time. If the stove is filled too full, the heat created may cause extreme stress in the chimney. Add fuel to the fire in moderation. Avoid smouldering fires as this produces the most pollution. The fire is best when it is burning well and the smoke from the chimney is almost invisible.

Danger of overheating

The fireplace must never be used in a manner that causes overheating.

Overheating occurs when there is too much fuel and/or too much air so that too much heat develops. A sure sign of overheating is when parts of the fireplace glow red. If this happens, reduce the air vent opening immediately.
Seek professional advice if you suspect that the chimney is not drawing properly (too much/too little draught). For further information, see **«4.0 Installation» (Chimney and flue pipe)**.

How wind and weather affect the stove

The performance of the stove can be affected considerably by the wind acting on the chimney at different strengths. It may therefore be necessary to adjust the air supply to ensure good combustion performance.

It might also be a good idea to install a damper in the flue pipe so that the chimney draught can be regulated according to the strength of the wind.

Condensation

Condensation in a fireplace / flue pipe / chimney may occur. This may be caused by moist firewood or differences in temperature in the fireplace and environment.

Condensed water coming from the fireplace appears as a black, tar-like liquid. This should be wiped off immediately to avoid discoloration of the fireplace, floor or surrounding building components.

It is important to get the wood burning quickly to avoid condensation.

If the condensation continues, mineral sand can be placed on the bottom plate.

5.0 Daily use

Odours when using the fireplace for the first time

- When the fireplace is used for the first time, it may emit an irritating gas which may smell slightly. This happens because the paint dries.The gas is not toxic but the room should be thoroughly ventilated. Let the fire burn with a high draught until all traces of the gas have disappeared and no smoke or odours can be detected.

Heating advice

NB: Logs that have been stored outdoors or in a cold room should be brought indoors 24 hours before use to bring them up to room temperature.
There are various ways of heating the stove but it is always important to be careful about what you put in the stove. See the section on **“Wood quality”**.

Extractor fans, when operating in the same room or space as the appliance, could cause problems.

Wood quality

By quality wood we mean most well-known types of wood such as birch, spruce and pine.

The logs should be dried so that the moisture content is no more than 20%.
To achieve this, the logs should be cut during the late winter. They should be split and stacked in a way that ensures good ventilation. The wood stacks should be covered to protect the logs from rain. The logs should be brought indoors during early autumn and stacked/stored for use in the coming winter.

Refuelling on to a low fire bed

If there is insufficient burning material in the firebed to light a new fuel charge, excessive smoke emission can occur. Refuelling must be carried out onto a sufficient quantity of glowing embers and ash that the new fuel charge will ignite in a reasonable period.If there are too few embers in the fire bed add suitable kindling to prevent excess smoke.

Be especially careful never to use the following materials as fuel in your fireplace:

- Household rubbish, plastic bags, etc.
- Painted or impregnated timber (which is extremely toxic).
- Laminated wooden planks.
- Driftwood

These may harm the product and are also pollutants.

NB: Never use petrol, paraffin, methylated spirit or similar liquids to light the fire. You may cause serious injury to yourself and damage to the product.

Wood consumption

Jøtul F 100 ECO.2 has a nominal heat output of **ca. 4,9 kW**. Use of wood, with nominal heat emission: Approx. **1,6 kg/h.** Another important factor for proper fuel consumption is that the logs are the correct size. The size of the logs should be:

Kindling:

Length:	approx. 25-33 cm
Diameter:	2 - 5 cm
Amount per fire:	6 - 8 pieces.

Firewood (split logs):

Recommend length:	25 - 33 cm
Diameter:	approx. 8 cm
Intervals for adding wood:	*Approximately every 45 minutes*
Size of the fire:	1,23 kg (nominal heat output)
Amount per load:	*2* pieces

Nominal heat output is achieved when the air vent is open approximately 50 % **(fig. 17**) The ignition vent is closed.

The maximum amount of fuel specified in this manual should not be exceeded, overloading can cause excess smoke.

Ash removal

Jøtul F 100 ECO.2 has an ash pan which makes it easy to remove the ashes.

- Only remove ashes when the fireplace is cold.

Fig. 19

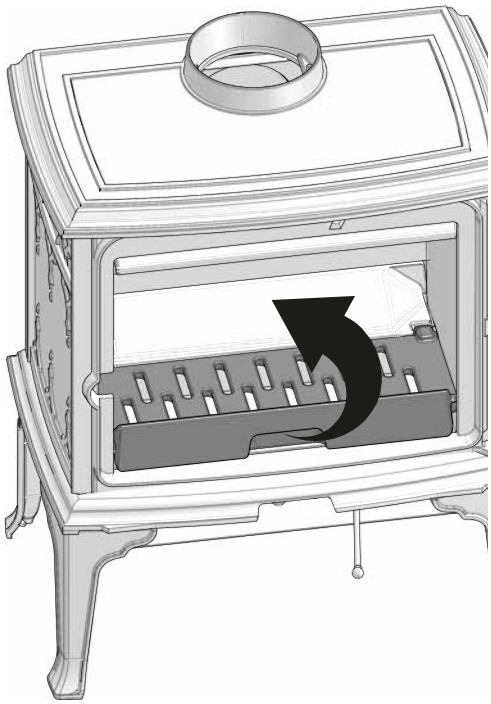

1. Scrape the ashes through the grate into the ash pan.
2. Make sure that the ash pan doesn't fill up so high that it keeps ash from coming through the grate into the pan.
3. Open the fire grate.

Fig. 20

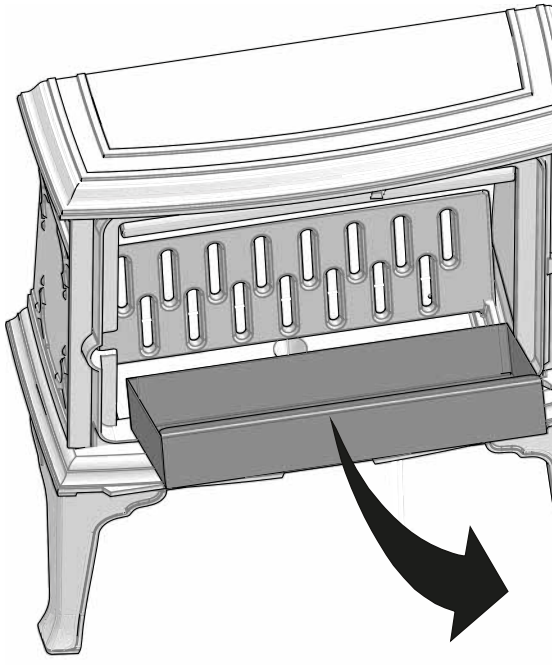

4. Lift out the ash pan and and empty it into a non-combustible container.
5. Put the ash pan back in.
6. Replace the fire grate.

5.12 General notes

PLEASE NOTE! Parts of the wood-burning stove, especially the outer surfaces, become hot during use. Due care should be exercised.

- Wear a glove when handling the stove
- Never empty ashes into a flammable container. Ashes can contain glowing embers long after you finish operating the stove
- Keep the combustion chamber closed except during ignition, refuelling and removal of residue material to prevent fume spillage
- Keep the air intake and output holes free from any accidental blokage while the stove is in use
- When the stove is not in use you can close the dampers to avoid a draught through the stove
- If the stove has not been used for some time, you should check the flue passageways for potential blockages before relighting
- We advise you strongly not to use the stove over night. The stove is not suited for this purpose
- NOTE: Never place flammable material in the radiation zone of the stove!

6.0 Maintenance

6.1 Cleaning the glass

The product is equipped with an air wash for the glass. Air is sucked in through the air vent on the top of the product and down along the inside of the glass.

However, some soot will always stick to the glass, but the quantity will depend on the local draught conditions and adjustment of the air vent. Most of the soot layer will normally be burned off when the air vent is opened all the way and a fire is burning briskly in the fireplace.

Good advice! For normal cleaning, moisten a paper towel with warm water and add some ash from the burn chamber. Rub it over the glass and then clean the glass with clean water. Dry well. If it is necessary to clean the glass more thoroughly we recommend using a glass cleaner *(follow the instructions on the bottle).*

6.2 Cleaning and soot removal

Soot deposits may build up on the internal surfaces of the fireplace during use. Soot is a good insulator and will therefore reduce the fireplace's heat output. If soot deposits accumulate when using the product, they can be easily removed by using a soot remover.

In order to prevent a water and tar layer from forming in the fireplace you should regularly allow the fire to burn hot in order to remove the layer. An annual internal cleaning is necessary to get the best heating effect from the product. It is a good idea to do this in connection with the sweeping of the chimney and flue pipes.

6.3 Sweeping of flue pipes to the chimney

On certain free-standing fireplaces the top plate can be lifted off and the pipe swept through the top.
Otherwise, flue pipes must be swept through the flue pipe sweeping hatch or through the product's door opening. Then, the baffle must be removed.

6.4 Inspection of the fireplace

Jøtul recommends that you personally inspect your fireplace carefully after sweeping/cleaning. Check all visible surfaces for cracks. Also check that all joints are sealed and that the gaskets are in the correct position. Any gaskets showing signs of wear or deformation must be replaced.
Thoroughly clean the gasket grooves, apply ceramic glue (available from your local Jøtul dealer), and press the gasket well into place. The joint will dry quickly.

6.5 Exterior maintenance

Painted products may change colour after several years usage. The surface should be cleaned and brushed free of any loose particles before new paint is applied.

Important! Never place anything on the top plate of the stove. This could cause permanent damage to the paint or enamel.

7.0 Service

Any unauthorised modifications to the product are prohibited!
Only original spare parts may be used!

7.1 Replacing parts in the burn chamber

Fig. 21

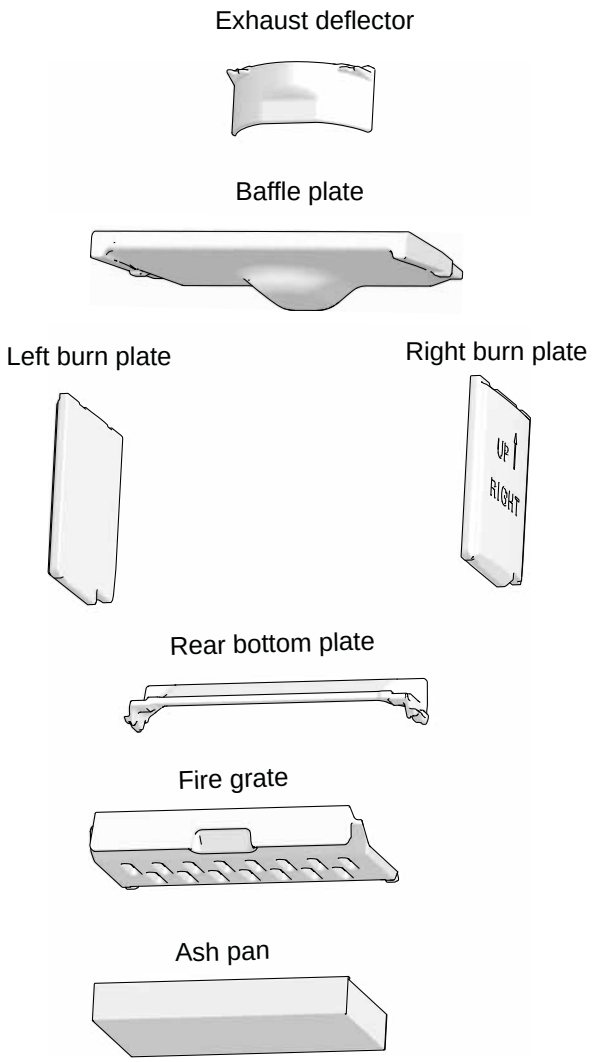

7.2 Replacing the baffle plate, burn plates and fire grate

Fig. 22

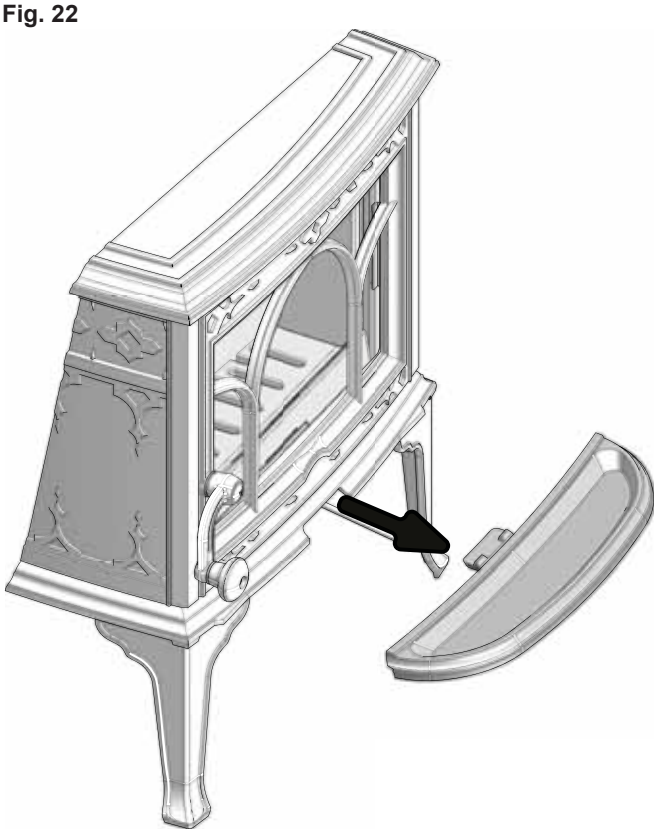

1. Remove the ash lip.

Fig. 23

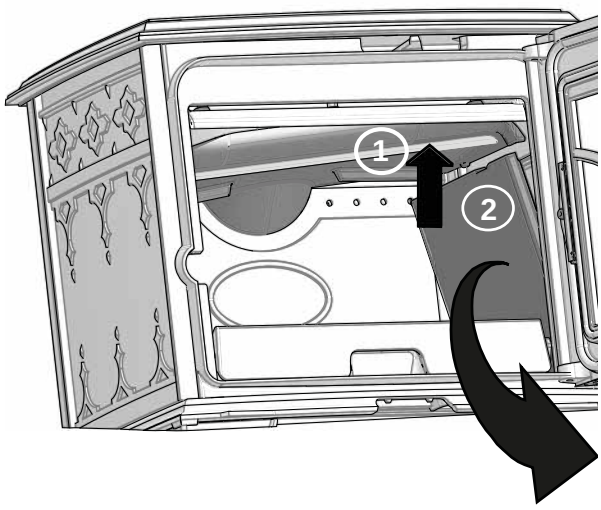

2. Lift the baffle, which rests on the burn plates in one side. While holding the baffle plate, lift the burn plate on the same side and remove it out of the burnchamber.

Fig. 24

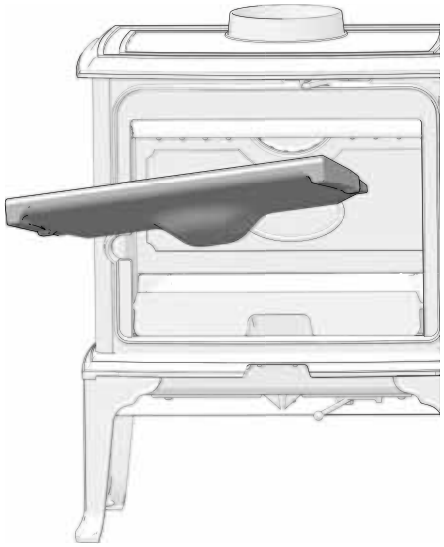

3. Tilt the baffle plate out.

Fig. 25

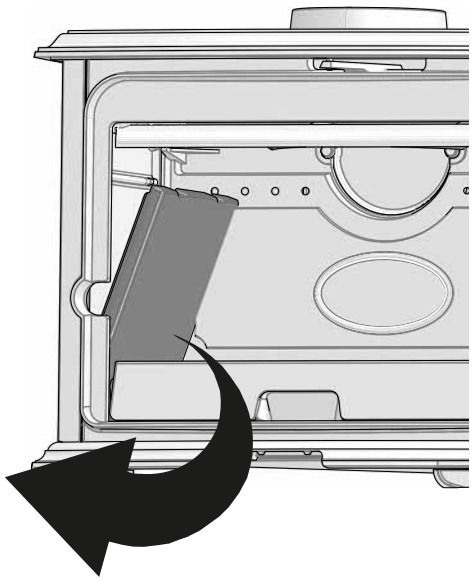

4. Then remove the other burn plate.

Fig. 26

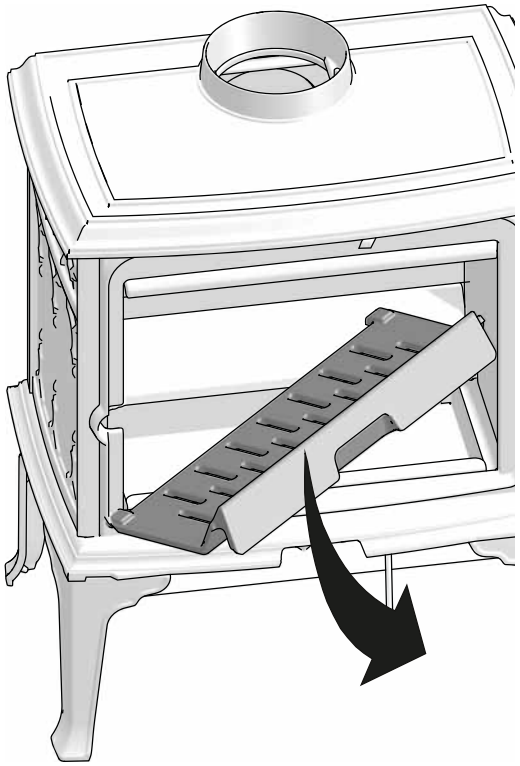

- Lift the fire grate and tilt it out.

Fig. 27

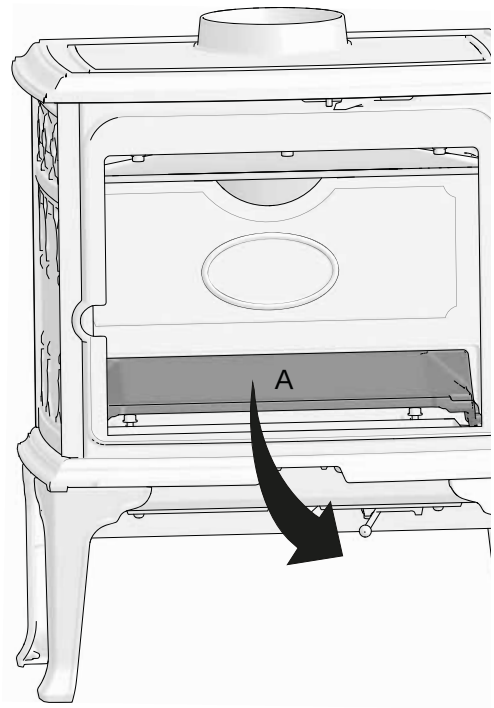

- Remove the rear bottom plate **(A)**.

When refitting:

- First place the rear bottom plate.
- Place the ash pan and the fire grate.
- Place the left side burn plate. Put the baffle plate on top oand hold it until the other side burn plate is back in place .

8.0 Operational problems - troubleshooting

Poor draught

Check the length of the chimney and that it complies with national laws and regulations. (See also **«2.0 Technical data»** and **«4.0 Installation» (Chimney and flue pipe)** in the installation manual for information.)
Make sure that the minimum cross section on the chimney is according to **«2.0 Technical data»** in the installation manual.
Make sure that there is not anything preventing the smoke gasses from escaping: branches, trees, etc.
Upon suspicion of excessive/poor draught in the chimney, seek professional help for measurement and adjustment.

The fire extinguishes after a while

- Make sure that the firewood is sufficiently dry.
- Find out whether there is negative pressure in the house, close mechanical fans and open a window close to the fireplace.
- Check that the air vent is open.
- Check that the flue outlet is not clogged by soot.

Unusual amount of soot accumulates on the glass

Some soot will always stick to the glass, but the quantity depends on:

- Moisture in the fuel.
- The local draught conditions.
- Air vent opening.

Most of the soot will normally burn off when the air vent is opened all the way and a fire is burning briskly in the fireplace. **(See «6.1 Cleaning the glass».)**

9.0 Optional equipment

9.1 Additional heat shield, rear

Art. no. 50012956

9.2 Smoke outlet for UK, Ø 125 mm

Art. no. 51012033

9.3 Self closing door mechanism

Art. no: 12021209

10.0 Recycling

10.1 Recycling packaging

Your fireplace is delivered with the following packaging:

- A wooden pallet that can be cut up and burned in the fireplace.
- Cardboard packaging that should be taken to a local recycling facility.
- Plastic bags that should be taken to a local recycling facility.

10.2 Recycling the fireplace

The fireplace is made of:

- Metal that should be taken to a local recycling facility.
- Glass that should be disposed of as hazardous waste. The glass in the fireplace must not be placed in a regular source segregation container.
- Vermiculite burn plates that can be disposed of in regular waste containers.

11.0 Guarantee terms

1. Our guarantee covers:

Jøtul AS guarantees that the external cast-iron parts are free from defects in materials or manufacturing at the time of purchase. You may extend the guarantee on the external cast-iron parts to 25 years from the date of delivery by registering the product on jotul.com, and print out the extended guarantee card within three months of purchase. We recommend that the guarantee card be kept together with the receipt. Jøtul AS also guarantees that steel plate parts are free from defects in materials or manufacturing at the time of purchase for a period of 5 years from the date of delivery.

The guarantee applies on the condition that the stove has been installed by a qualified installer in accordance with applicable laws and regulations and Jøtul's installation and operating instructions. Repaired products and replacement items are guaranteed within the original guarantee period.

2. The guarantee does not cover:

2.1. Damage to consumables such as burn plates, fire grates, flue baffles, gaskets and similar as these deteriorate over time due to normal wear and tear.
2.2. Damage caused as a result of improper maintenance, overheating, use of unsuitable fuel (e.g of unsuitable fuel are, but not limited to driftwood, impregnated wood, plank offcuts, chipboard) or too moist / wet wood.
2.3. Installation of optional extras for the purpose of rectifying local draught conditions, air supply or other circumstances beyond Jøtul's control.
2.4. Cases involving alterations / modifications to the fireplace without Jøtul's consent or the use of non-original parts.
2.5. Damage caused during storage at a distributor, transport from a distributor or during installation.
2.6. Products sold by unauthorized sellers in areas where Jøtul operates a selective distribution system.
2.7. Associated cost (e.g.but not limited to, transport, manpower, travel) or indirect damages.

Pellets stoves, glass, stone, concrete, enamel and paint finish (e.g. but not limited to chipping, cracking, bubbling or discolouration and crazing) are applicable to the national

legislation governing the sale of consumer goods. This guarantee is valid for purchases made within the territory of the European Economic Area. All guarantee inquiries must be addressed to your local authorized Jøtul dealer within a reasonable amount of time, which shall not be later than 14 days from the date on which the fault or defect first became apparent. See list of importers and dealers on our web site www.jotul.com.

If Jøtul is unable to meet the obligations outlined in the above guarantee terms, Jøtul will offer a replacement product with a similar heating capacity free of charge.

Jøtul reserve the right to decline of any replacement of parts or service in the event that the guarantee is not registrated online. This guarantee does not affect any rights under applicable national legislation governing the sale of consumer goods. The national complaint right applies from the purchase date and only in exchange for a receipt / serial number.

Manual Version P00

Jøtul AS, sept, 2025

Jøtul pursue a policy of constant product development. Products supplied may therefore differ in specification, colour and type of accessories from those illustrated and described in the brochure.

Jøtul vise sans cesse à améliorer ses produits. C'est pourquoi, il se réserve le droit de modifier les specifications, couleurs et équipements sans avis prélable.

Quality
Our policy gives the customers quality and safety piece of mind as a result of Jøtul's vast experience dating back to when the company first started in 1853.

Qualité
Cette politique nous permet d'offrir à nos clients une qualité et une sécurité reposant sur la vaste expérience accumulée par Jøtul depuis sa création en 1853.

Jøtul AS,
P.o. box 1411
N-1602 Fredrikstad,
Norway
www.jotul.com

EN

Declaration of performance

No CPR-F100ECO2-15072025

1	**Unique identification code of the product-type**	JØTUL F 100 ECO 2 LL, JØTUL F 100 ECO 2 LL SE
2	**Intended use(es)**	Space heating in residential buildings
3	**Manufacturer**	Jøtul AS Postboks 1411 1602 Fredrikstad, Norway
4	**Authorised representative**	-
5	**System(s) of AVCP**	System 3
6	**Harmonised standard**	EN 16510-2-1:2022
	Notified body(ies)	NB-1235 (DTI)
	Test report number	1235-CPR-ELAB-2541
7	**Declared performance:**	
	Essential characteristics	**Performances**
	Mechanical resistance and stability	
	Load bearing capacity	120 kg
	Safety in case of fire	
	Protection of combustible materials	
	Minimum distance to combustible materials - from bottom	d_B = 217 mm
	Minimum distance to combustible materials - floor in front	d_F = 0 mm
	Minimum distance to combustible materials - ceiling	d_C = 750 mm
	Minimum distance to combustible materials - rear	d_R = 400 mm
	Minimum distance to combustible materials - side	d_S = 550 mm
	Minimum distance to combustible materials - side radiation area	d_L = 0 mm
	Minimum distance to adjacent combustible materials (e.g. furniture)	d_P = 1000 mm
	Hygiene, health and environment	
	Emissions at nominal heat ouput	
	Carbon monoxide emission (CO)	1345 mg/Nm^3
	Nitrogen oxides emission (NO_x)	85 mg/Nm^3
	Emission of organic gaseous carbon (OGC)	104 mg/Nm^3
	Particulate matter emissions (PM)	25 mg/Nm^3
	Emissions at part load heat output	
	Carbon monoxide emission (CO)	NPD mg/Nm^3
	Nitrogen oxides emission (NO_x)	NPD mg/Nm^3
	Emission of organic gaseous carbon (OGC)	NPD mg/Nm^3
	Particulate matter emissions (PM)	NPD mg/Nm^3
	Safety and accessibility in use	
	Data for installation to a chimney at nominal heat output	
	Flue gas outlet temperature	341 °C
	Minimum flue draught	12 Pa
	Flue gas mass flow	4,4 g/s

EN

	Data for installation to a chimney at part load heat output		
	Flue gas outlet temperature		NPD °C
	Minimum flue draught		NPD Pa
	Flue gas mass flow		NPD g/s
	Data for installation to a chimney regarding fire safety on safety test heat output		
	Fire safety of installation to the chimney		T400 G
	Energy economy and heat retention		
	Appliance's thermal output and energy efficiency at nominal heat output		
	Space heat output		4,9 kW
	Water heat output, if available		NPD kW
	Efficiency		80 %
	Appliance's thermal output and energy efficiency at part load heat output		
	Space heat output		NPD kW
	Water heat output, if available		NPD kW
	Efficiency		NPD %
	Space heating efficiency		
	Seasonal space heating efficiency at nominal heat output		70 %
	Energy efficiency	Energy Efficiency Index (EEI)	106
		Energy efficiency class	A
	Electric power consumption at appliance's nominal heat output (if available)		NPD kW
	Electric power consumption at appliance's part load heat output (if available).		NPD kW
	Power consumption in standby mode (if available)		NPD kW
	Sustainable use of natural resources		
	Environmental sustainability		NPD
	"NPD" (No Performance Determined), if no quality is stated		

The performance of the product identified above is in conformity with the set of declared performance/s.
This declaration of performance is issued, in accordance with Regulation (EU) No 305/2011, under the sole responsibility of the manufacturer identified above.

Signed for and on behalf of the manufacturer by:

Espen Auensen (R&D Manager)

Place and date

Fredrikstad
15.07.2025



Espen Auensen (R&D Manager)

EU Declaration of Conformity (DoC)

This declaration of conformity is issued under the sole responsibility of the manufacturer:

Postal address: Postboks 1411
Postcode: 1602
City, Country: Fredrikstad, Norway
Telephone number: +47 69 35 90 00
E-Mail address: Teknisk@jotul.no

Unique identification of the product: JØTUL F 100 ECO 2 LL
JØTUL F 100 ECO.2 LL SE

Type: Local space heaters

Object of the declaration:



JØTUL F 100 ECO.2 LL



JØTUL F 100 ECO.2 LL SE

The object of the declaration described above is in conformity with the relevant Union harmonisation legislation (directive/s and regulations/s):

DIR 2009/125/EC
(EU) 2015/1186 (EL)

REG (EU) 305/2011
(EU) 2015/1185 (ED)

REG (EU) 2017/1369
2017/C 076/02

The following harmonised standards and technical specifications have been applied to demonstrate compliance with the above-mentioned legislation:

Title, Date of standard: EN 16510-1:2022, EN 16510-2-1:2022

Additional information (where applicable):
none

Signed for and on behalf of:

Place of issue: Fredrikstad, Norway

Date of issue 15.07.2025

Espen Auensen, R&D manager

ENERG Y IJA
енергия · ενεργεια IE IA

Jøtul AS F 100 ECO.2



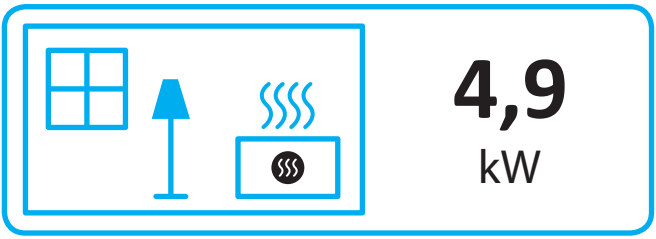

ENERGIA · ЕНЕРГИЯ · ΕΝΕΡΓΕΙΑ · ENERGIJA · ENERGY · ENERGIE · ENERGI

2015/1186

EU no. 2015/1186 - 24/04/2015

Datasheet / Fiche Technique / Ficha técnica / Scheda dati / Datenblatt / Dane techniczne

Requirements / Exigences / Requisitos / Requisiti / Vereisten / Forderungen / Wymagania	
Supplier / Fabricante / Fornitore / Vereisten / Lieferant/ Producent:	Jøtul AS
Product models Produits concernés Modelos Modelli Product modellen Varianten der Feuerstelle Modele produktu	**Jøtul F 100 ECO.2 LL, Jøtul F 100 ECO.2 LL SE, Jøtul F 100 ECO.2 SL, Jøtul F 100 ECO.2 SL SE**
Energy efficiency class / Classe énergétique / Clase de eficiencia energética / Classe energetica / Energie efficiëncy klasse / Energieeffizienz-Klasse / Klasa efektywnści energetycznej	A
Direct heat output / Puissance réelle de sortie / Potencia calorifica emitida / Emissione di calore diretta / Directe warmte afgifte / Nennwärmeleistung / Bezpośrednia moc grzewcza	4,9 kW
Energy efficiency index / Index de rendement énérgétique/ Índice de eficiencia energetica / Indice di efficienza energetica / Energie efficiëncy index / Energieeffizienz-Index / Indeks efetywności energetycznej	106,0
Efficiency at nominal heat output / Rendement à puissance nominale / Eficiencia al rendimiento nominal / Efficienza alla potenza nominale / Efficiency bij nominale warmte afgifte / Wirkungsgrad bei Nennheizleistung / Sparawność dla mocy znamionowej	80 %
• Any specific precautions that shall be taken when the local space heater is assembled installed or maintained. • Toutes les précautions spécifiques doivent être prises lors de l'assemblage, l'installation ou l'entretien de l'appareil. • Cualquier precaución específica que deba tenerse en cuenta durante el montaje, instalación o mantenimiento del equipo de calefacción • Precauzioni specifiche da prendere quando il riscaldatore viene assemblato, installato o mantenuto in uno spazio. • Eventuele specifieke voorzorgsmaatregelen die worden genomen wanneer de plaatselijke ruimteverwarming wordt gemonteerd, geïnstalleerd of onderhouden. • Besondere Maßnahmen bei Montierung, Installation und Wartung. • Waszelkie szczególne środki ostrożności, które należy podjać, gdy lokalny ogrzewacz pomieszczeń jest zamontowany lub konserwowany.	• Fire safety precautions such as safety distances when installing, national standards, local codes and regulations. See the Instructions manual. • Les précautions d'incendie telles que les distances de sécurité lors de l'installation, le suivi des normes, les codes locaux et les règlementations nationales. Veuillez lire le manuel d'installation. • Precauciones frente a incendios como distancia de seguridad en la instalación, estándares nacionales, códigos locales y reglamentos. Lea el manual de instalación. • Precauzioni per la sicurezza antincendio come le distanze di sicurezza durante l'installazione, le normative nazionali e locali. Leggere il manual. • Brandveiligheidsmaatregelen, zoals veiligheids-afstanden bij installatie, nationale normen, lokale codes en voorschriften. Lees de installatiehandleiding. • Für brenntechnische Verhältnisse, wie z.B. Aufstellbedingungen und nationale Forderungen. Siehe die Montage- und Bedienungsanleitung. Środki bezpieczeństwa przeciwpożarowego, takie jak odległości od materiałów palnych jakie należy zachować podczas instalacji, normy krajowe, lokalne przepisy i regulacje. Patrz instukcja obsługi..

Jøtul F 100 ECO.2

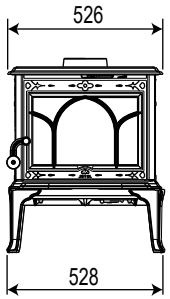

Jøtul F 100 ECO.2 LL (Langes Bein)
Jøtul F 100 ECO.2 LL SE (Langes Bein und Special Edition)

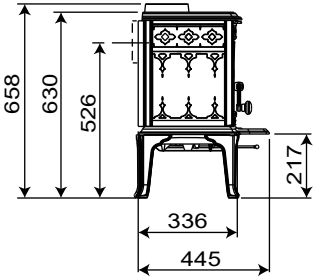

Jøtul F 100 ECO.2 SL (Kurzes Bein) und
Jøtul F 100 ECO.2 SL SE (Kurzes Bein und Special Edition)
Die Kurzbeinversion (Jøtul F 100 ECO.2 SL)

Nur für nicht brennbare Böden

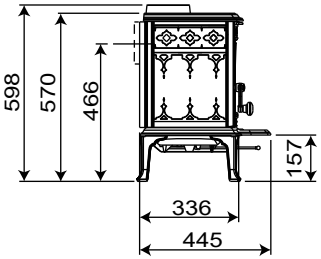

Min. abstand zu Brennbare wand

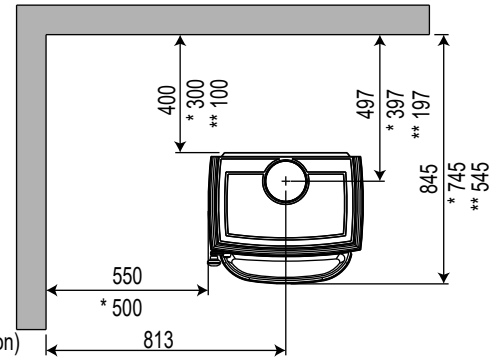

* Mit halbisoliertes Rauchrohr
** Mit halbisoliertes Rauchrohr und zusätzlicher Hitzeschtzplatte.

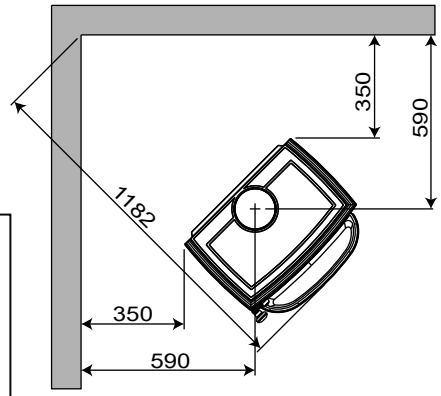

Floorplate

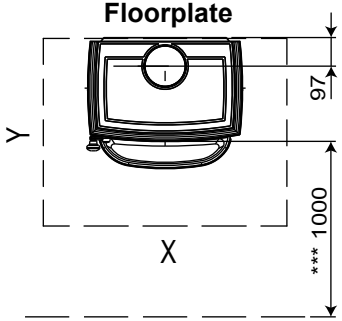

Min. Abmesseungen der Fußbodenplatte
X/Y = Gemäß den Geltenden nationalen Gesetzen und Regelungen
** Min. Abstand zu Möbeln/brennbare Material

Min. abstand zu brennbarer Wand mit Brandschutzwand

Externe Brandmauer

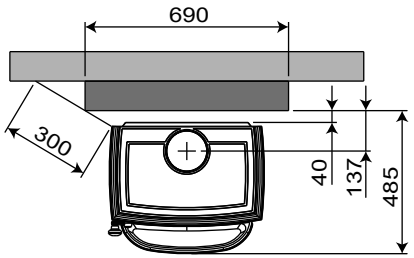

Integrierte Brandmauer

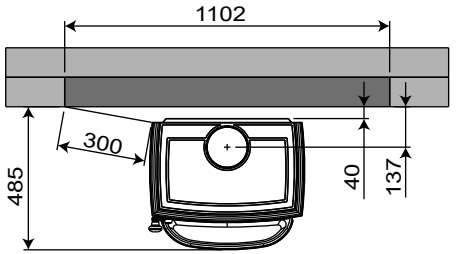

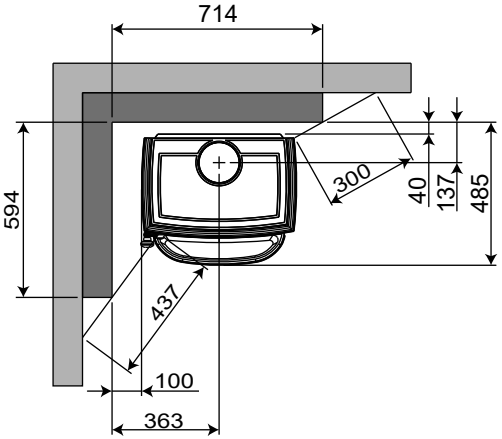

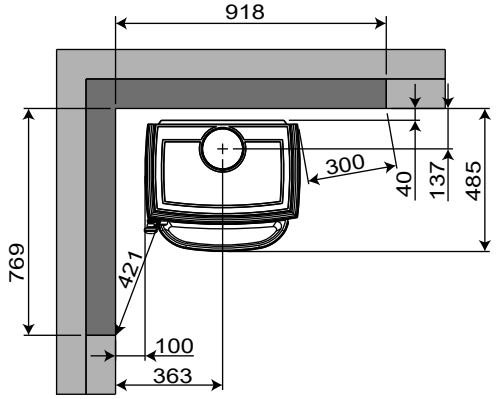

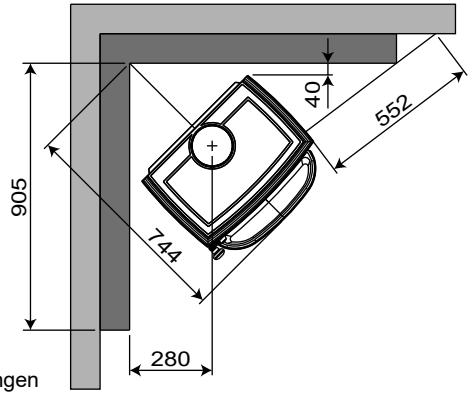

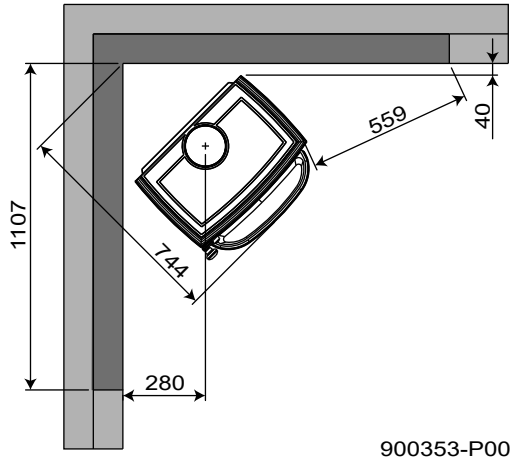

Brennbar

Brandmaur

900353-P00

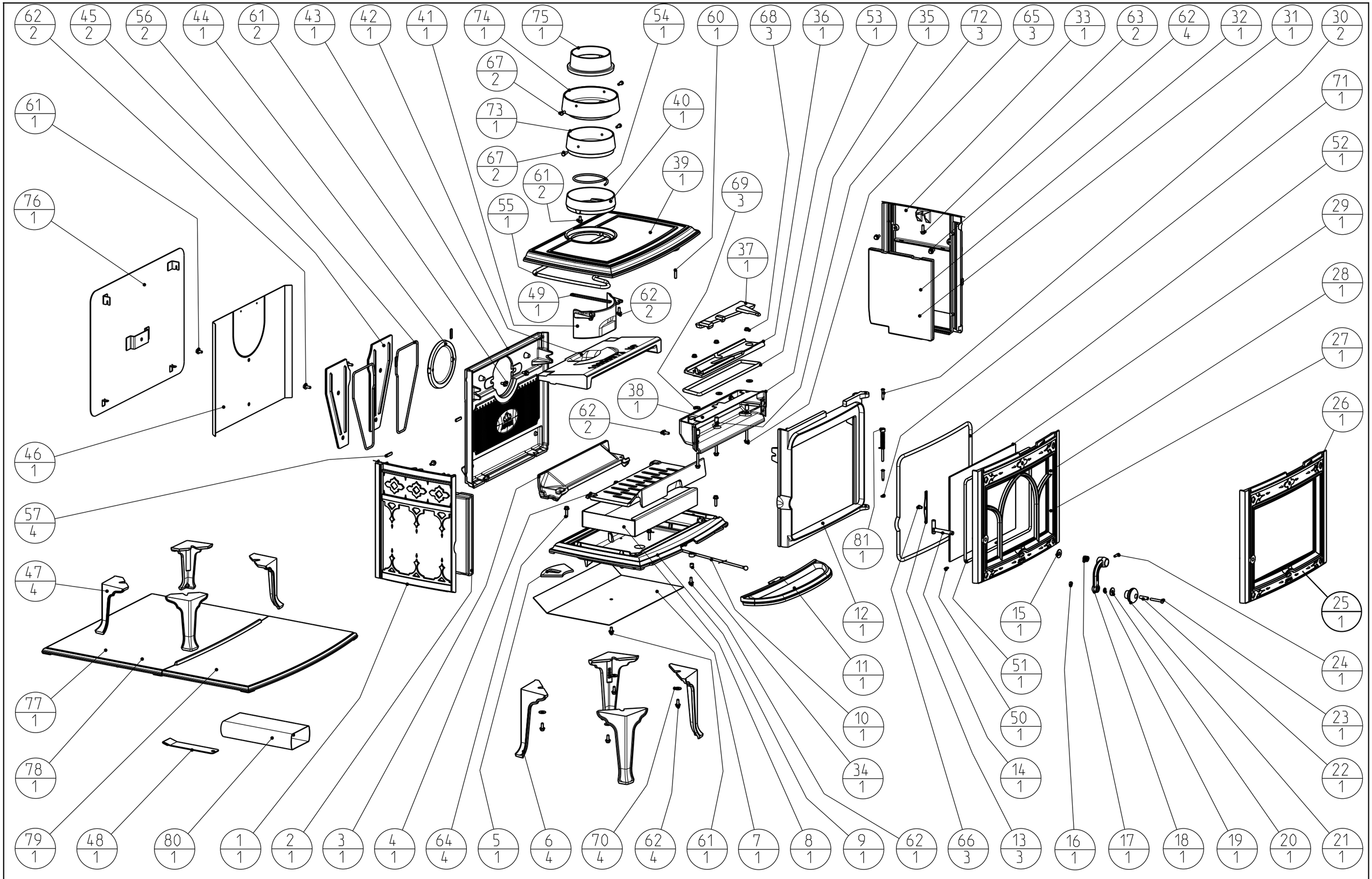

XX - Position number
YY - Quantity

Exploded view, Jøtul F 100 ECO.2		
Jøtul AS Fredrikstad, Norway	Draw.no: 900354-P00	Date: 15.12.2020

Jøtul F 100 ECO.2

F 100 ECO.2 LL BP cat. no. 30059879, F 100 ECO.2 LL SE BP cat. no. 30059881

F 100 ECO.2 LL SE BBE cat. no.30059883, F 100 ECO.2 LL SE IVE cat. no. 30059884 (LL=Long Legs 215mm, SE=Special Edidtion= Door without arches)

F 100 ECO.2 SL BP cat. no. 30059880, F 100 ECO.2 SL SE BP cat. no. 30059882 (SL=Short Legs 155mm, SE=Special Edidtion= Door without arches)

F 100 ECO.2 SL SE BBE cat. no.30060932, F 100 ECO.2 SL SE IVE cat. no. 30060933 (SL=Short Legs 155mm, SE=Special Edidtion= Door without arches)

BP= Sort lakk/Black Paint, BBE= Blåsort Emalje/Blue Black Enamel, IVE= Edelhvit Emalje/ Ivory enamel UP= Ulakkert/Unpainted

Pos. no.	***Spareparts***	***Consist of pos.no:***	***Benevnelse***	***Description***	***Dim./Spec.***
1	12018369		Sideplate venstre BP	Side plate left BP	Cast iron min. 4mm thickness
1	12018367		Sideplate venstre BBE	Side plate left BBE	Cast iron min. 4mm thickness
1	12030896		Sideplate venstre IVE	Side plate left IVE	Cast iron min. 4mm thickness
2			Vermikulitt brennplate venstre	Vermiculite burn plate left	Vermiculite 600Kg/m³
3	12054617		Fyrbunn bakre UP	Inner bottom, rear UP	Cast iron min. 4mm thickness
4	12054616		Fyrrist BP	Fire grate BP	Cast iron min. 4mm thickness
5	12018340		Ventil opptenning UP	Valve ignition UP	Cast iron min. 4mm thickness
6	12015042		Ben 215mm BP (for LL versjoner)	Leg 215mm BP (For LL versions)	Cast iron min. 4mm thickness
6	12015034		Ben 215mm BBE (for LL versjoner)	Leg 215mm BBE (For LL versions)	Cast iron min. 4mm thickness
6	12015035		Ben 215mm IVE (for LL versjoner)	Leg 215mm IVE (For LL versions)	Cast iron min. 4mm thickness
6	51012223		Ben 215mm (4 stk) BP (for LL versjoner)	Leg 215mm (4 pcs) BP (For LL versions)	Cast iron min. 4mm thickness
6	51012224		Ben 215mm (4 stk) BBE (for LL versjoner)	Leg 215mm (4 pcs) BBE (For LL versions)	Cast iron min. 4mm thickness
6	51012227		Ben 215mm (4 stk) IVE (for LL versjoner)	Leg 215mm (4 pcs) IVE (For LL versions)	Cast iron min. 4mm thickness
7	10024640		Skjermplate under	Heat shield under	Steel
8	10024642		Askeskuff	Ash pan	Steel
9	12054623		Bunnplate BP	Bottom plate BP	Cast iron min. 4mm thickness
9	12054966		Bunnplate BBE	Bottom plate BBE	Cast iron min. 4mm thickness
9	12054967		Bunnplate IVE	Bottom plate IVE	Cast iron min. 4mm thickness
10	10024638		Ventilstang	Handle	Ø6mm steel
11	12021379		Askeleppe BP	Ash lip BP	Cast iron min. 4mm thickness
11	12021380		Askeleppe BBE	Ash lip BBE	Cast iron min. 4mm thickness
11	12021428		Askeleppe IVE	Ash lip IVE	Cast iron min. 4mm thickness
12	12018374		Frontplate BP	Front plate BP	Cast iron min. 4mm thickness
13	12020930		Glassklips	Glass clip	Steel & glass fibre gasket
14	10024515		Stengejern	Latch bolt	Steel
15	10023578		Skive M10 svart, spesial	Washer M10 Black, Special	Ø10,5xØ25x1,5 Steel
16	10023475		Mutter sekskant M6 DIN 934	Nut Hexagon M6 DIN 934	St8.8 / ANSI B18.2
17	10024011		Fjær for klinke	Spring For Latch	Spring Steel
18	12017311		Vrider (Klinke) svart lakkert	Latch, black painted	Cast iron min. 4mm thickness
18	12020110		Vrider (Klinke) forniklet	Latch, nickel-plated	Cast iron min. 4mm thickness
19	10023464		Skive	Washer	Ø6,4xØ12,5x1,6, St8,8, DIN 125, Steel
20	10023919		Skive spesial	Washer special	Ø23xØ8,2x2 insulating mat.
21	10024025		Treknott	Wooden knob	Hardved\hard wood
22	10024023		Hylse	Sleeve	Ø8xØ6xL27,5mm, Steel
23	10023611		Skrue, maskin panhode pozidrive	Screw, machine pan head pozidrive	M6x40, DIN 7985, Steel
24	10023684		Skrue M6X25 lang tapp	Screw M6x25 Long Dog Point Set	Steel
25	12021599	13,14,15,16,17,18,19,20,21,22,23,24,26,50,51,52,66	Dør komplett - u/glass SE (Dør uten spiler BP)	Door , complete excl/glass SE (Door without arches BP)	BP
25	12054959	13,14,15,16,17,18,19,20,21,22,23,24,26,50,51,52,66	Dør komplett - u/glass SE (Dør uten spiler BBE)	Door , complete excl/glass SE (Door without arches BBE)	BBE
25	12054962	13,14,15,16,17,18,19,20,21,22,23,24,26,50,51,52,66	Dør komplett - u/glass SE (Dør uten spiler IVE)	Door , complete excl/glass SE (Door without arches IVE)	IVE
26			Dør uten spiler SE BP	Door without arches SE BP	

Pos. no.	Spareparts	Consist of pos.no:	Benevnelse	Description	Dim./Spec.
26			Dør uten spiler SE BBE	Door without arches SE BBE	BBE
26			Dør uten spiler SE IVE	Door without arches SE IVE	IVE
27	12021376	13,14,15,16,17,18,19,20,21,22,23,24,28,50,51,52,66	Dør komplett - u/glass (Dør med spiler BP)	Door , complete excl/glass (Door with arches BP)	BP
28			Dør med spiler BP	Door without arches BP	
29	10024654		Glass	Glass	379x270x4mm, keramisk\ceramic
30	10024103		Hengseldubb, sortkromatisert	Hinge pin, black chromated	Ø6x33mm, Steel
30	10023975		Hengseldubb, forniklet	Hinge pin, nickel plated	Ø6x33mm
31	10054451	2,32	Brennplater sett V+H	Burn plates kit L+R	Vermiculite 600Kg/m³
32			Vermikulitt brennplate høyre	Vermiculite burn plate right	Vermiculite 600Kg/m³
33	12018364		Sideplate høyre BP	Side plate right BP	Cast iron min. 4mm thickness
33	12018362		Sideplate høyre BBE	Side plate right BBE	Cast iron min. 4mm thickness
33	12030893		Sideplate høyre IVE	Side plate right IVE	Cast iron min. 4mm thickness
34	10024413		Hylse	Sleeve	Ø10xØ6,2xL10mm, Steel
35	12060635		Luftbrem BP	Air deflector BP	Cast iron min. 4mm thickness
36	12018338		Ventilplate UP	Valve plate UP	Cast iron min. 4mm thickness
37	12017438		Ventilsleide BP	Valve BP	Cast iron min. 4mm thickness
38	10054452		Luftbegrenser	Air restrictor	Steel
39	12021582	39,44,55,61(2pcs)	Topplate komplett BP	Top plate complete BP	Cast iron min. 4mm thickness
39	12021583	39,44,55,61(2pcs)	Topplate komplett BBE	Top plate complete BBE	Cast iron min. 4mm thickness
39	12033806	39,44,55,61(2pcs)	Topplate komplett IVE	Top plate complete IVE	Cast iron min. 4mm thickness
40	12018816		Røykstuss innvendig Ø125 BP	Smoke outlet, dripless Ø125 BP	Cast iron min. 4mm thickness
40	12018813		Røykstuss innvendig Ø125 BBE	Smoke outlet, dripless Ø125 BBE	Cast iron min. 4mm thickness
40	12049995		Røykstuss innvendig Ø125 IVE	Smoke outlet, dripless Ø125 IVE	Cast iron min. 4mm thickness
41	12054621		Ledeplate UP	Exhaust deflector UP	Cast iron min. 4mm thickness
42	10059973		Hvelv vermikulitt	Baffle Vermiculite	Vermiculite 600Kg/m³
43	12060633		Bakplate UP	Rear plate UP	Cast iron min. 4mm thickness
44	12018811		Røykhullsdeksel BP	Smoke outlet cover BP	Cast iron min. 4mm thickness
44	12018807		Røykhullsdeksel BBE	Smoke outlet cover BBE	Cast iron min. 4mm thickness
44	12018808		Røykhullsdeksel IVE	Smoke outlet cover IVE	Cast iron min. 4mm thickness
45	12018394		Deksel sekundærluft UP	Cover for air manifold UP	Cast iron min. 4mm thickness
46	10024639		Skjermplate bak, svart	Heat shield rear, black	Steel
46	10050009		Skjermplate bak, ubeh alu zn	Heat shield rear, untreated alu zn	0,9mm Alu zn belagt stål\coated steel
47	12015095		Ben 155mm BP (for SL versjoner)	Leg 155mm BP (For SL versions)	Cast iron min. 4mm thickness
47	12015093		Ben 155mm BBE (for SL versjoner)	Leg 155mm BBE (For SL versions)	Cast iron min. 4mm thickness
47	12028848		Ben 155mm IVE (for SL versjoner)	Leg 155mm IVE (For SL versions)	Cast iron min. 4mm thickness
47	51012177		Ben 155mm (4 stk) BP (for SL versjoner)	Leg 155mm (4 pcs) BP (For SL versions)	Cast iron min. 4mm thickness
47	51012178		Ben 155mm (4 stk) BBE (for SL versjoner)	Leg 155mm (4 pcs) BBE (For SL versions)	Cast iron min. 4mm thickness
47	51012179		Ben 155mm (4 stk) IVE (for SL versjoner)	Leg 155mm (4 pcs) IVE (For SL versions)	Cast iron min. 4mm thickness
48	10026011		Løst håndtak flatt	Loose handle flat	2mm steel
49	10060981		Kulefanger (for feiing)	Protection Bar For Sweep Ball	Steel
50		50027204 (5m)	Pakning under glass	Gasket under glass	V-125x15 mm graph W/A (2pcs)
51		50027205 (5m)	Pakning til glass	Gasket for glass	LD-250-2 graph Ø6,4x1300mm
52		50027203 (5m)	Pakning mellom dør og front	Gasket Between door and front	LD 375-2 Ø9,5x1620mm
53		50027205 (5m)	Pakning underside av ventilplate	Gasket for valve plate	LD-250-2 graph Ø6,4x835mm
54		50027201 (5m)	Pakning mellom røykstuss og røykrør	Gasket between smoke outlet and flue	LD-187 graph Ø4,8x500mm
55		50027203 (5m)	Pakning for topp-plate	Gasket for top plate	LD 375-2 Ø9,5x1620mm
56		50027205 (5m)	Pakning mellom bakplate og deksel sekundærluft	Gasket between rear plate and cover for air manifold	LD-250-2 graph Ø6,4x750mm (2pcs)
57		50027204 (5m)	Pakning (til bakplate)	Gasket (for rear plate)	V-125x30 mm graph W/A (4pcs)
60	10023576		Skrue Gjengestift med Hul ende M6x25 DIN 916	Screw Socket Set with Cup point M6x25 S DIN 916	Steel, black
61	10023545		Skrue sekskant med flens M6x12 DIN 6921	Screw Hex Cap Flange M6x12 DIN 6921	St8.8 / ANSI B18.2

Pos. no.	Spareparts	Consist of pos.no:	Benevnelse	Description	Dim./Spec.
62	10023541		Skrue sekskant med flens M6x16 DIN 6921	Screw Hex Cap Flange M6x16 DIN 6921	St8.8 / ANSI B18.2
63	10023540		Skrue sekskant med flens M6x20 DIN 6921	Screw Hex Cap Flange M6x20 DIN 6921	St8.8 / ANSI B18.2
64	10023536		Skrue sekskant med flens M6x25 DIN 6921	Screw Hex Cap Flange M6x25 DIN 6921	St8.8 / ANSI B18.2
65	10023574		Skrue sekskant med flens M6x40 DIN 6921	Screw Hex Cap Flange M6x40 DIN 6921	St8.8 / ANSI B18.2
66	10023561		Skrue sylinderh. innv. sekskant lavh. M6x8 DIN 7984	Screw cylinder head int.hex. low head M6x16 DIN 7984	St8.8 / ANSI B18.2 ,black
67	10048871		Skrue sekskant M6x16 selvgjengende DIN 7500D	Screw hex cap M6x16 selfthread DIN 7500D	Steel, ELZn
68	10023666		Mutter sekskant med flens M6 DIN 6923	Nut Hexagon Cap Flange M6 DIN 6923	St8.8 / ANSI B18.2
69	10023780		Skive M6 Ø6,4xØ18x1.6 DIN 9021	Washer M6 Ø6.4xØ18x1.6 DIN 9021	St8.8 / ANSI B18.2
70	10023559		Skive M8 Ø8,4xØ20x1.5 DIN 522	Washer M8 Ø8.4xØ20x1.5 DIN 522	St8.8 / ANSI B18.2
71	10024339		Skive Ø6.2x12x1.8 Messing	Washer Ø6.2x12x1.8 Brass	Brass
72	10023998		Hylse	Sleeve	Ø10xØ6,2xL15mm, Steel
		Optional equipment			
		Smoke Outlet For UK, Ø125mm dripless			
73	51012033	73,61(2pcs),67(2pcs)	Røykstuss innvendig Ø125 BP (for UK)	Smoke outlet, dripless Ø125 BP (for UK)	Cast iron min. 4mm thickness
73	51012034	73,61(2pcs),67(2pcs)	Røykstuss innvendig Ø125 BBE (for UK)	Smoke outlet, dripless Ø125 BBE (for UK)	Cast iron min. 4mm thickness
73	51050088	73,61(2pcs),67(2pcs)	Røykstuss innvendig Ø125 IVE (for UK)	Smoke outlet, dripless Ø125 IVE (for UK)	Cast iron min. 4mm thickness
		Smoke Outlet, Ø150mm dripless			
74	12021463		Røykstuss innvendig Ø150 BP	Smoke outlet, dripless Ø150 BP	Cast iron min. 4mm thickness
		Smoke Outlet, Ø125mm non dripless			
75	12018329	Use together with position 83 in Germany	Røykstussutvendig Ø125 BP	Smoke Outlet, Ø125mm non dripless BP	Cast iron min. 4mm thickness
75	12018328	Use together with position 83 in Germany	Røykstussutvendig Ø125 BBE	Smoke Outlet, Ø125mm non dripless BBE	Cast iron min. 4mm thickness
		Heatshield Rear , extra complete			
76	50012956		Skjermplate bak, ekstra komplett BP	Heatshield Rear , extra complete BP	Steel
		Floor Plates Cast Iron for Norway			
77	51012191	78, 79	Gulvplater støpejern Norge BBE	Floor Plates Cast Iron Norway BBE	Cast iron min. 4mm thickness width 630, depth 766, height 17
78			Gulvplate under støpejern BBE	Floor Plate Under Cast Iron BBE	Cast iron min. 4mm thickness width 630, depth 467, height 17
79			Gulvplate foran støpejern BBE	Floor Plate Front Cast Iron BBE	Cast iron min. 4mm thickness width 630, depth 317, height 17
80	12021378	16,19,20,21,22,23,60,54	Treknott og smådeler	Wooden knob and small parts	
81	12021209		Fjær for selvlukkende dør	Spring for self closing door	
82	12021450	14,15,16,17,18,19,20,21,22,23,24	Vrider kompl (frontdør) Sort	Latch compl (front door) Black	
82	12021451	14,15,16,17,18,19,20,21,22,23,24	Vrider kompl (frontdør) Forniklet	Latch compl (front door) Nickel crom	
		For Germany			
83	51013589	Use together with position 75 in Germany	Adapter Ø125-Ø130mm BP	Adaptor Ø125-Ø130mm BP	Steel, 0,8mm thickness
84	51061366	75,81,83	Adaptersett for Tyskland	Adaptor Kit for Germany	
					Draw.no: 900355-P01