Jøtul F 602 ECO

Jøtul F 602 ECO
EN 16510
Manual Version P00

UK - Installation and operating instructions 3

FR - Manuel d'installation et d'utilitation 24

ES - Instrucciones para montaje e instalación 44

IT - Manuale di installazione ed uso 65



JØTUL

The manuals which are enclosed with the product must be kept throughout the product's entire service life. Les manuels fournis avec le produit doivent être conservés pendant toute la durée de vie du produit. Los manuales suministrados con este producto deben guardarse durante todo el ciclo de vida del producto. I manuali inclusi con il prodotto vanno conservati per l'intera durata di vita del prodotto.

EU no. 2015/1186 - 24/04/2015

Datasheet / Fiche Technique / Ficha técnica / Scheda dati / Datenblatt / Dane techniczne

Requirements / Exigences / Requisitos / Requisiti / Vereisten / Forderungen / Wymagania	
Supplier / Fabricante / Fornitore / Vereisten / Lieferant/ Producent:	Jøtul AS
Product models Produits concernés Modelos Modelli Product modellen Varianten der Feuerstelle Modele produktu	**JØTUL F 602 ECO**
Energy efficiency class / Classe énergétique / Clase de eficiencia energética / Classe energetica / Energie efficiëncy klasse / Energieeffizienz-Klasse / Klasa efektywnści energetycznej	A+
Direct heat output / Puissance réelle de sortie / Potencia calorifica emitida / Emissione di calore diretta / Directe warmte afgifte / Nennwärmeleistung / Bezpośrednia moc grzewcza	4,9 kW
Energy efficiency index / Index de rendement énérgétique/ Índice de eficiencia energetica / Indice di efficienza energetica / Energie efficiëncy index / Energieeffizienz-Index / Indeks efetywności energetycznej	107
Efficiency at nominal heat output / Rendement à puissance nominale / Eficiencia al rendimiento nominal / Efficienza alla potenza nominale / Efficiency bij nominale warmte afgifte / Wirkungsgrad bei Nennheizleistung / Sparawność dla mocy znamionowej	81 %
• Any specific precautions that shall be taken when the local space heater is assembled installed or maintained. • Toutes les précautions spécifiques doivent être prises lors de l'assemblage, l'installation ou l'entretien de l'appareil. • Cualquier precaución específica que deba tenerse en cuenta durante el montaje, instalación o mantenimiento del equipo de calefacción • Precauzioni specifiche da prendere quando il riscaldatore viene assemblato, installato o mantenuto in uno spazio. • Eventuele specifieke voorzorgsmaatregelen die worden genomen wanneer de plaatselijke ruimteverwarming wordt gemonteerd, geïnstalleerd of onderhouden. • Besondere Maßnahmen bei Montierung, Installation und Wartung. • Wszelkie szczególne środki ostrożności, które należy podjać, gdy lokalny ogrzewacz pomieszczeń jest zamontowany lub konserwowany.	• Fire safety precautions such as safety distances when installing, national standards, local codes and regulations. See the Instructions manual. • Les précautions d'incendie telles que les distances de sécurité lors de l'installation, le suivi des normes, les codes locaux et les règlementations nationales. Veuillez lire le manuel d'installation. • Precauciones frente a incendios como distancia de seguridad en la instalación, estándares nacionales, códigos locales y reglamentos. Lea el manual de instalación. • Precauzioni per la sicurezza antincendio come le distanze di sicurezza durante l'installazione, le normative nazionali e locali. Leggere il manual. • Brandveiligheidsmaatregelen, zoals veiligheids-afstanden bij installatie, nationale normen, lokale codes en voorschriften. Lees de installatiehandleiding. • Für brenntechnische Verhältnisse, wie z.B. Aufstellbedingungen und nationale Forderungen. Siehe die Montage- und Bedienungsanleitung. • Środki bezpieczeństwa przeciwpożarowego, takie jak odległości od materiałów palnych jakie należy zachować podczas instalacji, normy krajowe, lokalne przepisy i regulacje. Patrz instukcja obsługi.

UK - Installation and operating instructions

Table of contents

2.0 Technical Data 3

3.0 Safety 7

4.0 Installation 12

5.0 Daily use 17

6.0 Maintenance 18

7.0 Service 19

8.0 Operational problems - troubleshooting 22

9.0 Optional equipment 22

10.0 Recycling 22

11.0 Guarantee terms 22

2.0 Technical Data

Installation

- All local regulations, including those referring to national and European Standards as well as the information provided in this assembly and instruction manual need to be complied with when installing the appliance.
- When you install any kind of fireplace or stove, you must inform the local building and housing authorities. In addition you are obliged to have the installation inspected and approved by a local chimney sweep prior to the commissioning
- To ensure best possible functionality and safety for your installation, we advise you to call a professional fitter. Your Jøtul Dealer will be able to recommend a qualified fitter in your area. For information on Jøtul Dealers, please go to www.jotul.com

Safety

Any changed made to the product by the dealer, fitter or user could result in the product and safety functions not functioning as intended. The same applies to the fitting of accessories or extra equipment not supplied by Jøtul AS. This could also be the case if parts that are neccessary for the operation and safety of the stove are dismantled or removed.

This stove is produced in accordance with type approval for the product, which also covers the product's Assembly and Instruction Manual. Read and follow the user operating instructions carefully.

The Declaration of Performance (DoP) is available on www.jotul.com

Technical data

Test in compliance with EN 16510			
	Classification of appliance	Type BE	
P_{nom}	Nominal heat output	4,9	kW
η_{nom}	Energy efficiency at nominal heat output	81	%
η_s	Seasonal space heating energy efficiency at nominal heat output	71	%
EEI	Energy efficiency index	107	
	Energy efficiency class	A+	
	Fuel	Wood logs *	
	Fuel length, maximum	400	mm
	Fuel consumption	1,42	kg/h
	Amount of fuel	1,19	kg
	Amount of fuel, maximum	2	kg
CO_{nom}	CO emission at 13% O_2 at nominal heat output	0,06	%
		1133	mg/Nm^3
NO_{xnom}	NO_x emission at 13% O_2 at nominal heat output	88	mg/Nm^3
OGC_{nom}	OGC emission at 13% O_2 at nominal heat output	46	mg/Nm^3
PM_{nom}	Dust emission at 13% O_2 at nominal heat output	23	mg/Nm^3
p_{nom}	Flue draught at nominal heat output	12	Pa
	Recommended sub-pressure in the connecting piece	18-20	Pa
	Required combustion air supply	10,6	m^3/h
T_{snom}	Flue gas outlet temperature at nominal heat output	311	°C
T class	Chimney designation	T400 G	
$Ø_{f.g\ nom}$	Flue gas mass flow at nominal heat output	4,6	g/sec
V_h	Standing air loss	NPD	m^3/h
	Leakage before testing at gauge pressure of 5 Pa (1013 mbar, 27 °C)	3,17	Nm^3/h
	Leakage before testing at gauge pressure of 10 Pa (1013 mbar, 27 °C)	5,74	Nm^3/h
	Leakage before testing at gauge pressure of 15 Pa (1013 mbar, 27 °C)	7,53	Nm^3/h
CON/INT	Continuous operation (CON)/Intermittend operation (INT)	INT**	
	Reaction to fire classification	A1	
E, f	Power supply voltage, frequency	-	V

* Use only recommended fuels - designation I.

** Intermittent operation in this context means normal use of a wood-burning stove. In other words, you should let the fire die down until only the embers are left before refueling.

Technical Data

Basic technical data			
	Materials	Stainless steel Cast iron Ceramic stone/vermiculite Glass	
	Surface treatment	Senotherm	
	Smoke outlet	Top/Back	
d_{out}	Diameter of the flue gas outlet	125	mm
	Fresh air connection piece external diameter	80	mm
L	Overall dimensions (length)	540	mm
H	Overall dimensions (height)	637	mm
W	Overall dimensions (width)	320	mm
m	Mass (weight)	86	kg
m_{chim}	Maximum load of a chimney the stove may carry	120	kg

Minimum distances to combustible materials			
d_R	Rear (uninsulated / insulated start section)	300/250	mm
d_S	Sides	500***	mm
d_C	Ceiling	750	mm
d_P	Front	550	mm
d_F	Front to the bottom front radiation area	0	mm
d_L	Front to the side front radiation area	0	mm
d_B	Minimum distance below the bottom not regarding feet	252	mm
d_{non}	Minimum distances to non-combustible walls.	50	mm
	Corner (uninsulated / insulated start section)	350/300***	mm
	The code for insulated flue pipe	T400-N1-D-Vm-L50050-G100	

*** Use of accessories: see installation drawings

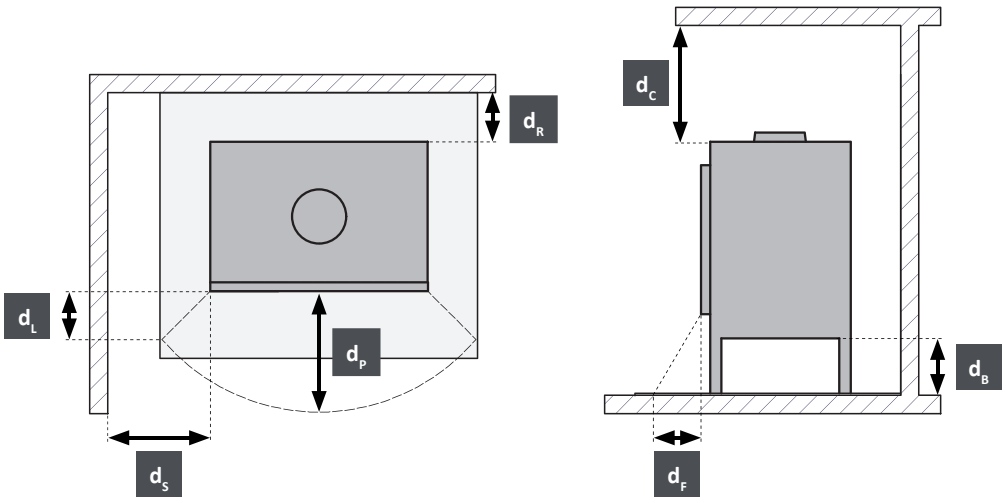

Approval Label

All Jøtul wood-burning stoves are fitted with an approval label that specifies the approval standards and the distance to combustible materials.

The approval label is located at the rear of the stove.
The approval label provides a pin and lot number. These numbers should be quoted when contacting your dealer or Jøtul AS and is required in the event of a complaint.

Approval Label

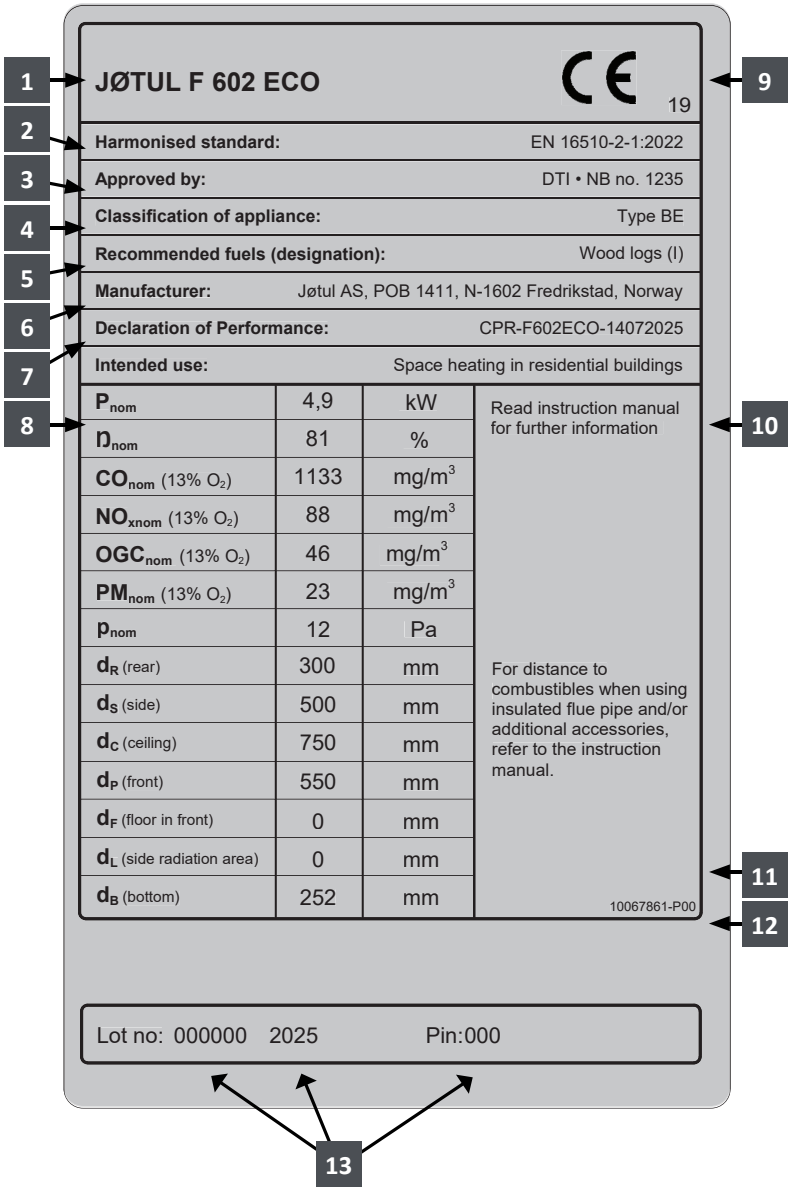

TYPE PLATE EXPLANATION

1. Type and/or the model number or designation to enable the appliance to be identified
2. Applicable standards
3. Name of test centre/certification number
4. Classification of appliance
5. Recommended fuels
6. Manufacturer's name and address
7. DOP document number
8. Table of values:

   P_{nom} - nominal heat output

   N_{nom} - energy efficiency at nominal heat output

   CO_{nom} - CO emission at 13% O_2 at nominal heat output

   NO_{xnom} - NO_x emission at 13 % O_2 at nominal heat output

   OGC_{nom} - OGC emission at 13 % O_2 at nominal heat output

   PM_{nom} - dust emission at 13 % O_2 at nominal heat output

   p_{nom} - flue draught at nominal heat output

   Minimum distances to combustible materials:

   d_R - back

   d_S - sides

   d_C - ceiling

   d_P - front

   d_F - front to the bottom front radiation area

   d_L - front to the side front radiation area

   d_B - below the bottom (not regarding feet)

9. CE mark of conformity- The digits indicate the year of issue of the certificate
10. Product specifications and instructions
11. Waste electrical and electronic equipment
12. Type plate number
13. Product registration number

ENGLISH

3.0 Safety

NB! To guarantee optimal performance and safety, Jøtul recommends that its stoves are fitted by a qualified installer (see www.jotul.com for a complete list of dealers).

Any modifications to the product may result in the product and safety features not functioning as intended. The same applies to the installation of accessories or optional extras not supplied by Jøtul. This may also be the case if parts that are essential to the functioning and safety of the fireplace have been disassembled or removed.

In all these cases, the manufacturer is not responsible or liable for the product and the right to make a complaint becomes null and void.

The Clean Air Act

"The Clean Air Act 1993 and Smoke Control Areas"

Under the Clean Air Act local authorities may declare the whole or part of the district of the authority to be a smoke control area. It is an offence to emit smoke from a chimney of a building, from a furnace or from any fixed boiler if located in a designated smoke control area. It is also an offence to acquire an "unauthorised fuel" for use within a smoke control area unless it is used in an "exempt" appliance ("exempted" from the controls which generally apply in the smoke control area).

In England appliances are exempted by publication on a list by the Secretary of State in accordance with changes made to sections 20 and 21 of the Clean Air Act 1993 by section 15 of the Deregulation Act 2015. Similarly in Scotland appliances are exempted by publication on a list by Scottish Ministers under section 50 of the Regulatory Reform (Scotland) Act 2014.

In Northern Ireland appliances are exempted by publication on a list by the Department of Agriculture, Environment and Rural Affairs under Section 16 of the Environmental Better regulation Act (Northern Ireland) 2016.
In Wales appliances are exempted by regulations made by Welsh Ministers.

Further information on the requirements of the Clean Air Act can be found here: https://www.gov.uk/smoke-control-area-rules

Your local authority is responsible for implementing the Clean Air Act 1993 including designation and supervision of smoke control areas and you can contact them for details of Clean Air Act requirements.

The Jøtul F 602 ECO has been recommended as suitable for use in smoke control areas when burning wood logs.

3.1 Fire Prevention Measures

There is a certain element of danger every time you use your fireplace. The following instructions must therefore be followed:

- The minimum safety distances when installing and using the fireplace are given in **fig. 1**. The specified distance to flammable materials, applies to this stove. The stove must be installed with a CE approved flue. The distance of the flue pipe to combustible materials must also be observed.
- Ensure that furniture and other flammable materials are not too close to the fireplace. Flammable materials should not be placed within **550 mm** of the fireplace.
- Allow the fire to burn out. Never extinguish the flames with water.
- The fireplace becomes hot when lit and may cause burns if touched.
- Only remove ash when the fireplace is cold. Ash can contain hot embers and should therefore be placed in a non-flammable container.
- Ash should be placed outdoors or be emptied in a place where it will not present a potential fire hazard.

In case of chimney fire:

- Close all hatches and vents.
- Keep the firebox door closed.
- Call the fire service.
- Before use after a fire an expert must check the fireplace and the chimney in order to ensure that it is fully functional.

3.2 Glove

Use the protective glove when handling the product when it is hot.

3.2 Floor

Foundation

You need to make sure the foundation is suitable for a fireplace. See **"2.0 Technical Data"** for specified weight.

We recommend the removal of any flooring that is not attached to the foundation ("floating floors") beneath the installation.

Requirements for protection of wooden flooring beneath the fireplace

The product can be placed directly on a wooden floor, protected by a floor plate made from non combustible material (recommended thickness - minimum **0,9 mm**)

Jøtul recommends that any flooring made of combustible material, such as linoleum, carpets, etc. should be removed from under the floor plate.

Requirements for protection of inflammable floors in front of the fireplace

The front plate must comply with national laws and regulations.
Contact your local building authorities regarding restrictions and installation requirements.

3.3 Walls

- The product should be placed so that it is possible to clean the stove, flue pipe and chimney outlet.
- Make sure furniture and other combustible materials do not get too close to the stove.
- Make shure furniture and other items are not placed too close to the stove, to prevent them from drying out.

Distance to walls made of combustible material - see **fig. 1a**
The stove must be installed with a CE approved flue pipe.
The distance from flue pipes to combustible materials must also be taken into account.

Combustible wall protected by firewall

Distance to combustible wall protected by firewall: See **fig. 1b** . Distances with semi-inslulated chimney/shielded flue pipe are shown in fig. 1a.

Firewall requirement

The firewall must be at least **100 mm** thick and be made of brick, concrete-stone or light concrete. Other materials and structures with satisfactory documentation may also be used.

Non-combustible wall (all the way through)

The fireplace can be installed with a minimum of 100 mm to non-combustible wall if the distance from the fireplace to all combustible materials are a minimum of 300 mm.

Non-combustible materials mean materials like brick, clinker, concrete, mineral wool, cilicate plates etc (materials that do not burn). **Note!** A short distance to non-combustible wall may lead to desiccation and discoloration of paint and cause cracking.

Fig. 1a

Jøtul F 602 ECO

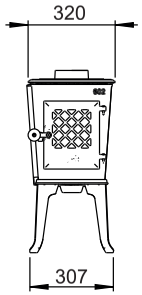

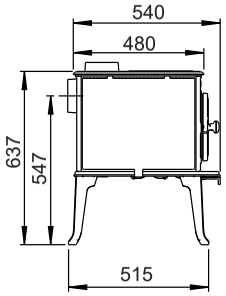

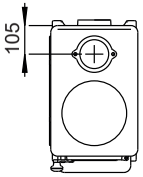

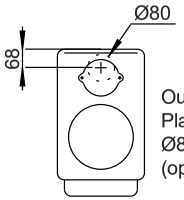

Outside air connection
Plassering på underside
Ø80mm
(optional extra)

Min. measurement floorplate
X/Y Acc. to national standards

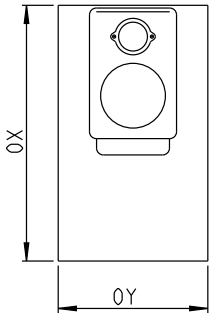

Min. distance to combustible wall

With heat shield

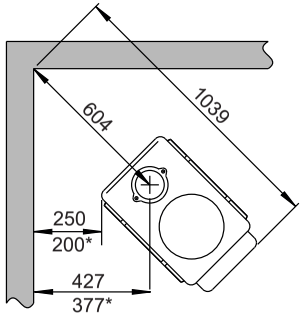

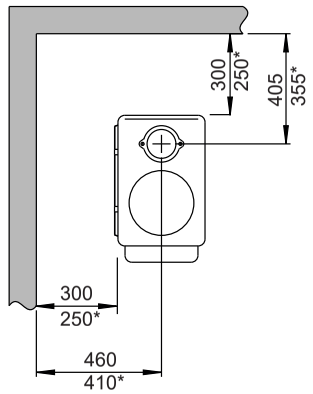

Without heat shield

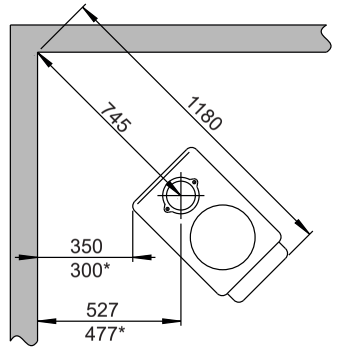

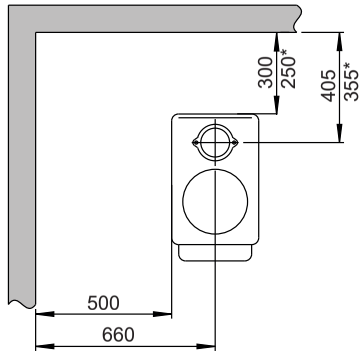

Distance to combustible ceiling

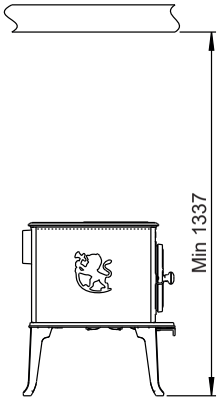

Min. height of firewall

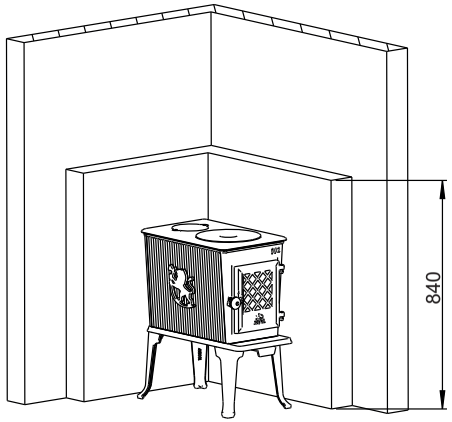

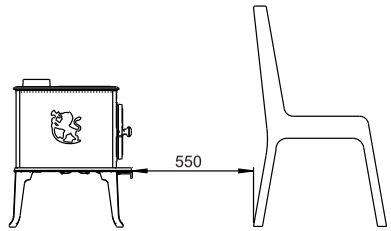

Combustible wall
Firewall

* semi-insulated chimney / shielded flue pipe
right down to the stove

900293-P00

ENGLISH

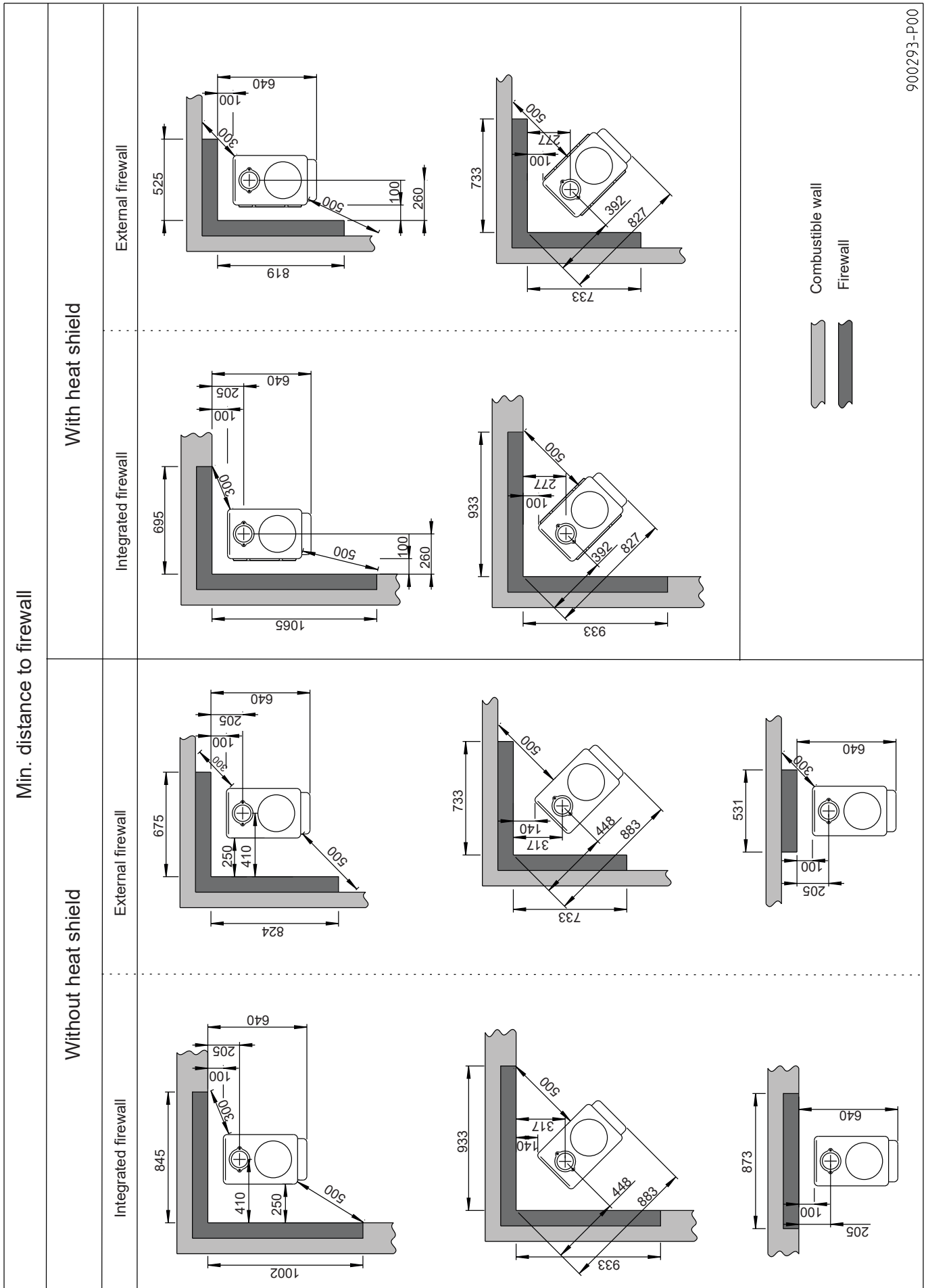
Min. distance to firewall
Without heat shield
With heat shield
Integrated firewall
External firewall
Combustible wall
Firewall
900293-P00

Fig. 1b

3.4 Ceiling

There must be a minimum distance of 700 mm to a combustible ceiling above the fireplace.

Fresh air supply

The air used for combustion in any well-insulated house needs to be replaced. This is particularly important in houses with mechanical ventilation. Such replacement air can be procured in several ways. The most important thing is to supply the air to the room where the stove is placed. Place the outside wall valve as close to the stove as possible and make sure that it can be closed when the stove is not in use.

Extractor fans, when operating in the same room or space as the appliance, could cause problems.

For the fresh air supply connection, follow the national and local building regulations.

Important! Ensure that air vents in the room where the fireplace is located are not blocked.

Closed combustion system

Use the stove's closed combustion system if you live in recently built, airtight dwellings. Connect the external combustion air through a ventilation pipe through the wall or the floor.

Air supply

The amount of combustion air for Jøtul's products is approximately 20-40 m^3/h. The outside air connection may be fitted directly to the Jøtul F 602 ECO through:

- the bottom
- through a flexible supply hose from the outside/chimney (only if the chimney has its own duct for external air) and to the product's outside air connector.

Through an outside wall

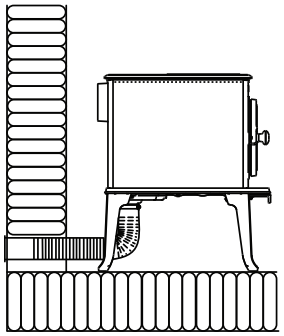

Through the floor and ground plate

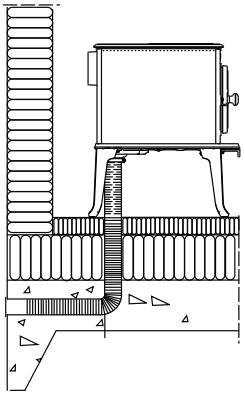

Through the floor and basement

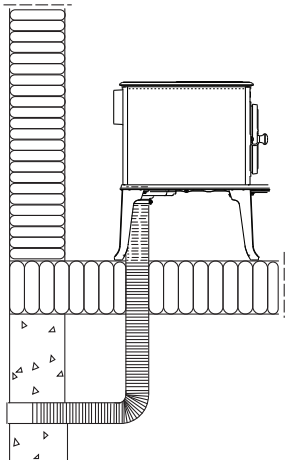

Indirectly through an outside wall

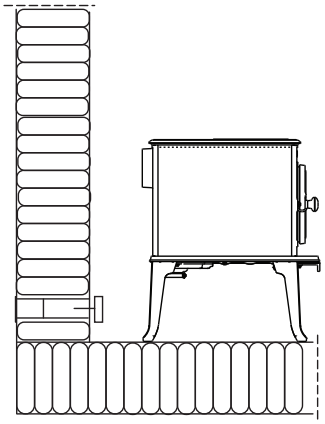

4.0 Installation

- Before installing the fireplace, check it carefully for any signs of damage.
- The product is heavy! Ask someone to help you when positioning and installing it.
- **Make sure that furniture and other household items are at a safe distance from the fireplace to protect them from drying out.**
- The stove must be installed in rooms with a good ventilation. A good ventilation is vital for the efficient operation of your stove.
- The appliance shall not be installed with ventilating systems which have pressure below -15 Pa.
- We recommend installing smoke detectors in the home.
- The distances specified in the manual only apply if you comply with the maximum amount of firewood. They only guarantee fire safety.
- There is no guarantee that the present building materials can withstand the temperature in relation to visual changes.
- Check that Building Regulations and any local by laws are followed during installation.

4.1 Prior to installation

1. The standard product comes in one package.
2. Remove thebag of screws and smoke outlet from the stove.
3. When the product is unpacked, release from the pallet.

Make sure everything is in order.

Fig. 2 Release from pallet

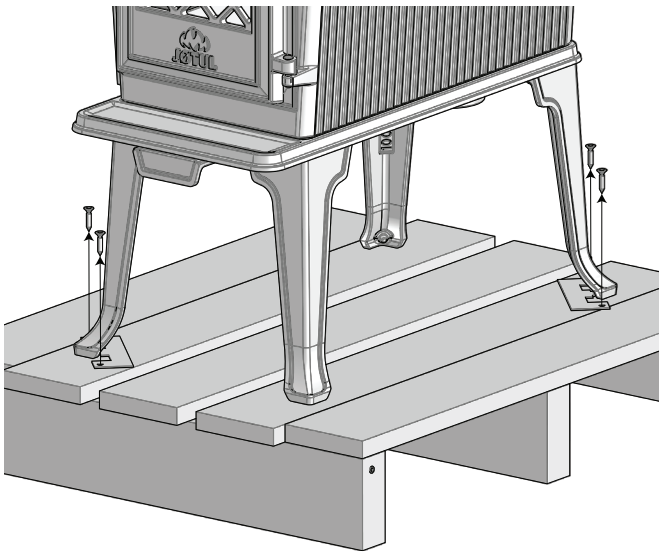

4. Remove the 4 transport screws

Requirement for UK

"The Jotul F 602 ECO stove has been recommended as suitable for use in smoke control areas when burning wood logs and when fitted with a mechanical stop to prevent secondary air control closure less than 360 mm^2

Fig. 3 Requirement for UK

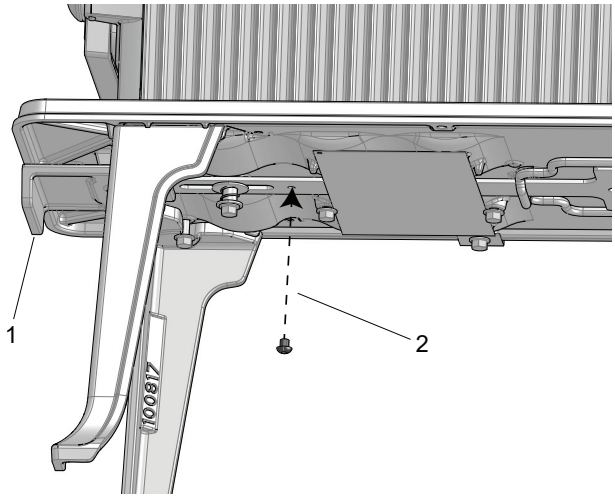

1. Put the valve edge-to-edge with the ash lip.
2. Us the screw from the bag of screws and screw it into the burnchamber.

4.2 Installation

Fig. 4a Assemble the handle - parts



Fig. 4b Assemble the handle

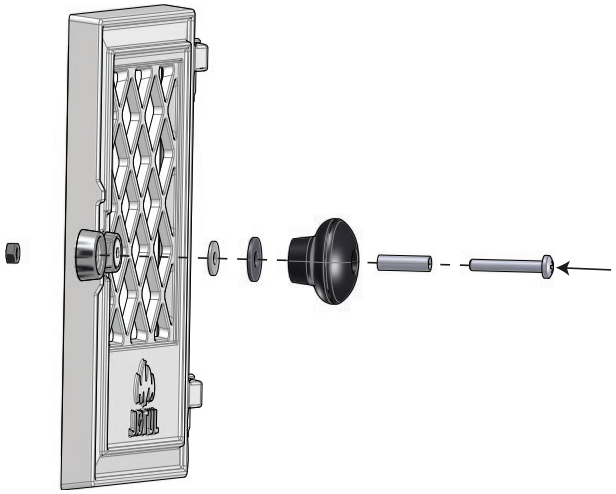

1. Mount the wooden knob on the door handle. The parts are in the bag of screws.

Fig. 5 Installing heat shield (optional extra)

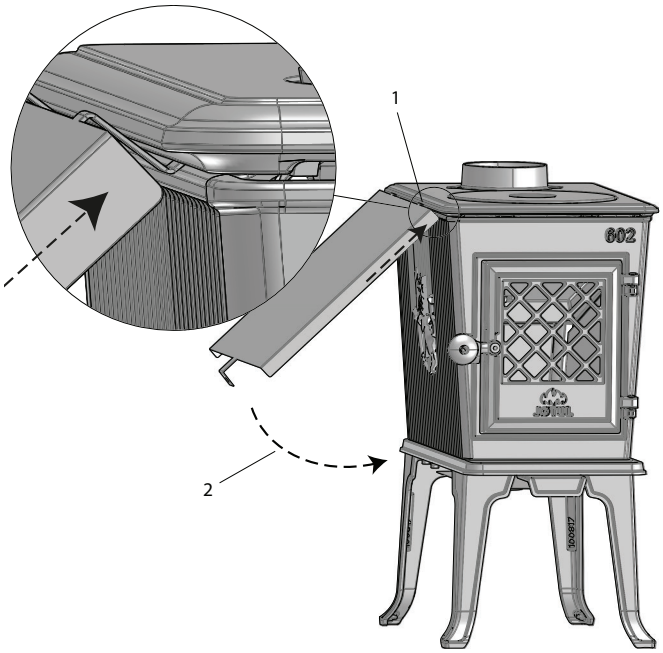

1. Hook the heat shield into the groove under the top plate.
2. Bend the shield plate towards the oven.
3. The heat shield can be mounted on either the right or left side (possibly both sides if required).

Fig. 5b Attach the heat shield

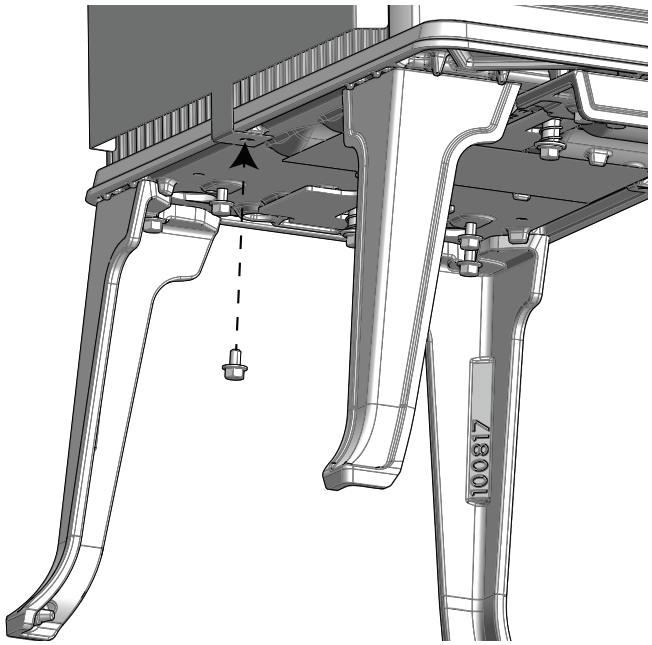

1. Screw the heat shield to the underside of the product, with the screw included in the bag of screws.

Fig. 6 Mount the smoke outlet on the top outlet

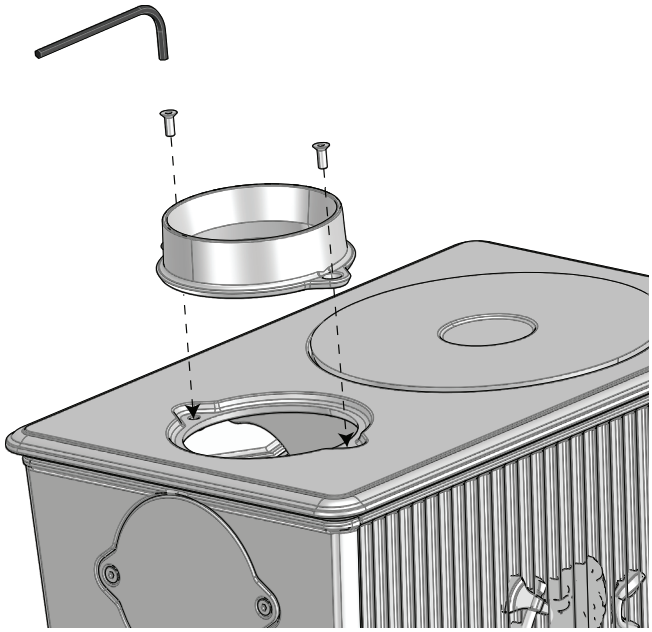

1. Tighten the smoke outlet with the screws that are screwed into the product from the factory.

Fig. 7a Switch from top outlet to rear outlet

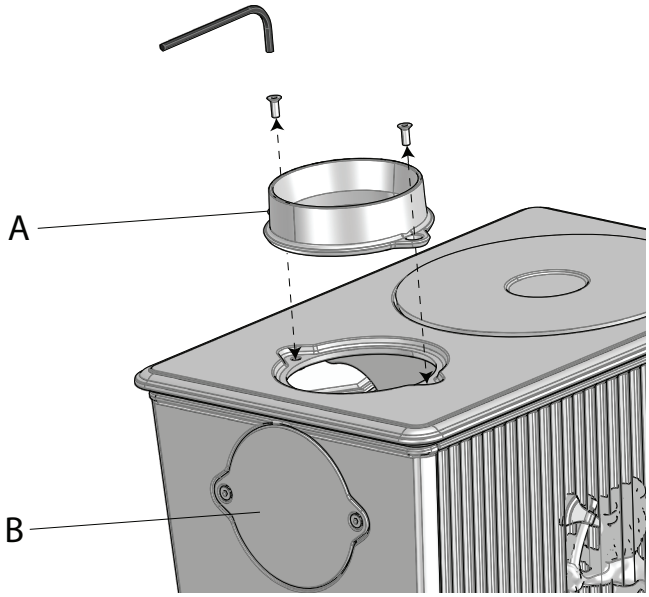

Fig. 7b

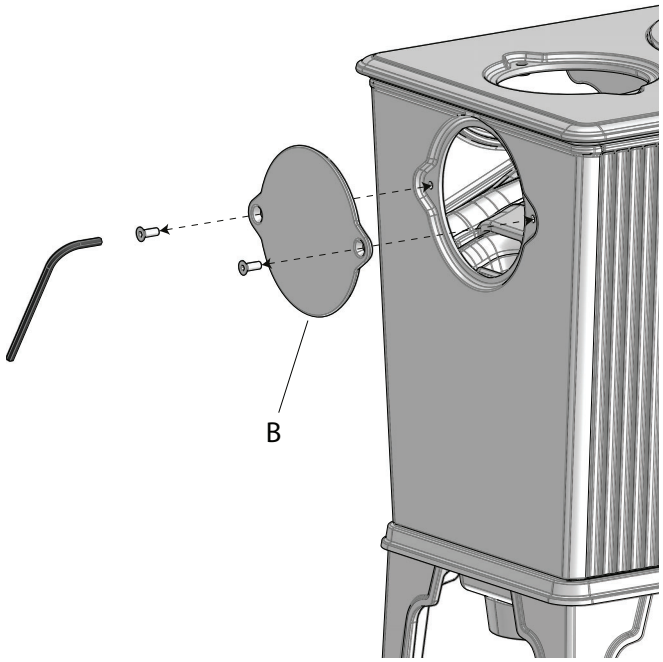

1. Switch places between smoke outlet **(A)** and smoke outlet cover **(B)**. Unscrew the two screws with an Allen key.

4.3 Assembly with an external air supply (optional extra)

Fig. 8 Loosen the screws for the external air supply adaptor.

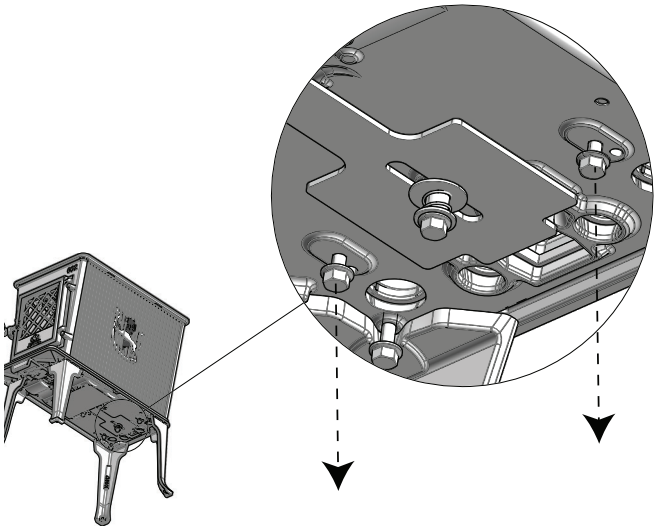

1. The screws to be used for the external air supply adaptor are mounted in the oven from the factory. These must be loosened and used as shown in Fig. 10 if fresh air supply is to be used.

Fig. 9 Installation of gasket on the external air supply adaptor

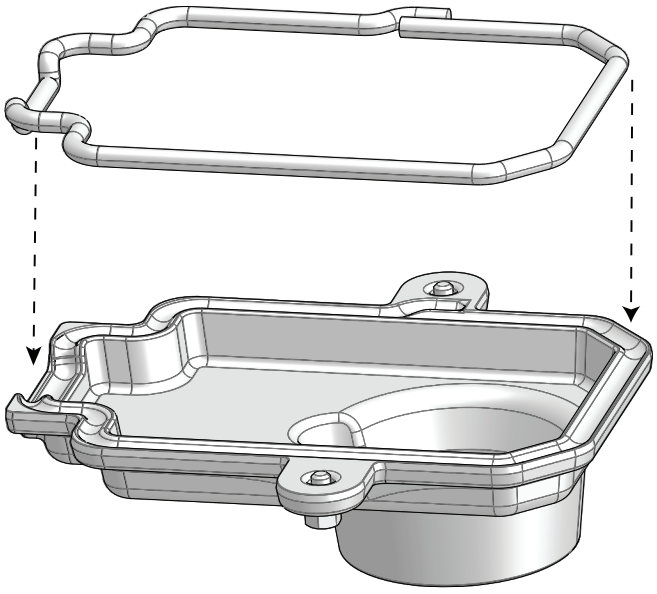

1. Remove the protective paper from the supplied gasket and place the gasket in the slot on the external air supply adaptor.

Fig. 10 Mounting of the external air supply

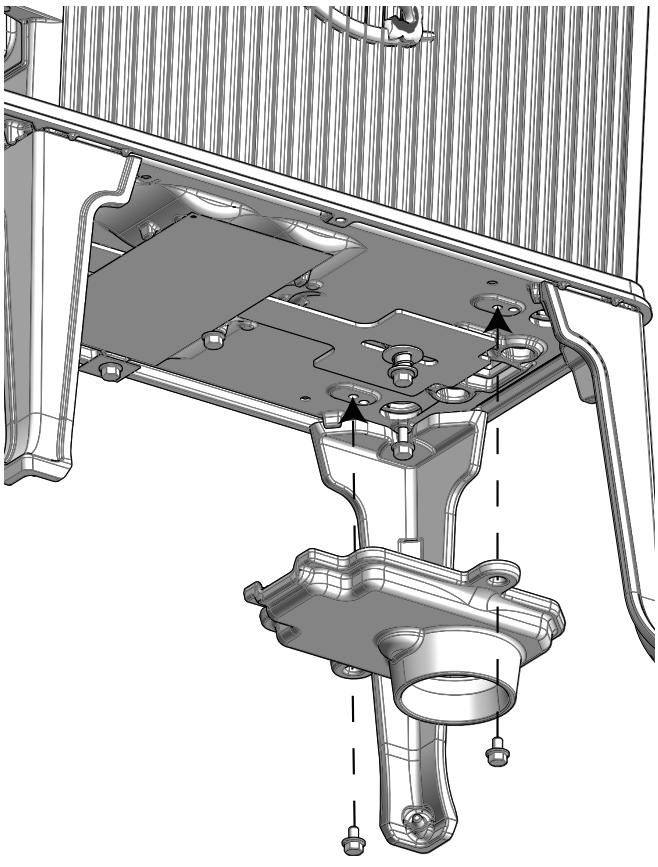

1. The screws loosened in Fig. 8 are used to secure the external air supply adaptor.

Fig. 11 Mounting of external air supply connection

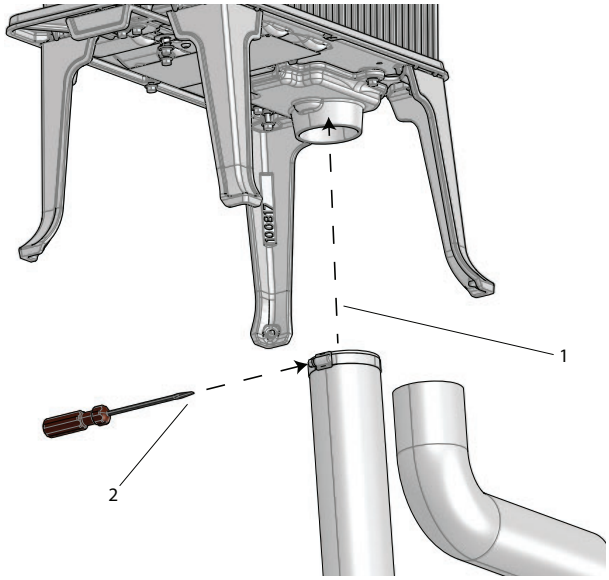

1. Place the external air supply connection on the outside of the external air supply adaptor.This works the same way for both wall and floor outlet.
2. Tighten with screwdriver.

4.4 Location of approval label

Fig. 12 Approval label

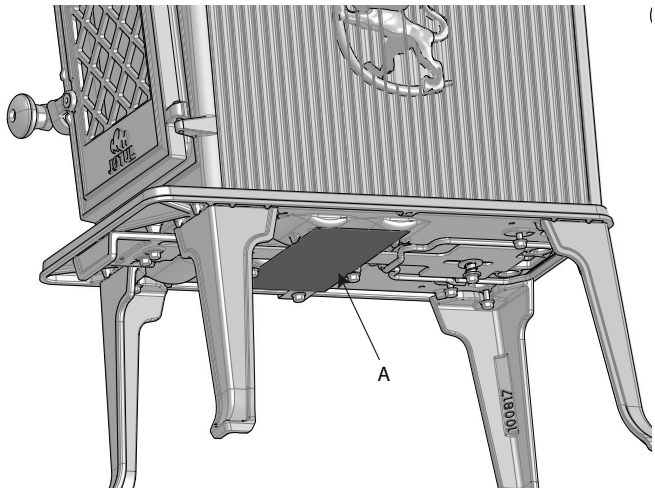

1. The approval label **(A)** is located on the bottom of the stove.

4.5 Chimney and flue pipe

- The fireplace must only be connected to a chimney and flue pipe approved for solid fuel fireplaces with flue gas temperatures as specified in «**2.0 Technical Data**».
- For flue pipe dimension see "**2.0 Technical Data**". NB: The chimney's diameter must be at least just as big as the flue pipe.
- Connection to the chimney must be carried out in accordance with the chimney supplier's installation instructions.
- Before a hole is made in the chimney, the product should be test-mounted in order to correctly mark the position of the fireplace and the hole in the chimney. See fig. 1 for minimum dimensions.
- Use a flue pipe bend with a sweep hatch to allow sweeping.
- Please note that it is extremely important for connections to have a degree of flexibility. This is to prevent any movement in the installation leading to the formation of cracks.
- For recommended chimney draught, see «**2.0 Technical Data**».
- When using a semi-insulated flue pipe (starter section), the part must at a minimum comply with class T 400-N1-D-Vm-L50050-G100. For installation requirements, see drawing.
- The function of the chimney and the flue pipe in terms of safety distances must be met. The chimney shall be proven according to EN 13384-2:2015+A1:2019 depending on the individual situation on site.

NB! The minimum recommended chimney length is 3.5 m from the flue pipe insert. If the draught is too strong, a flue pipe damper can be installed and used to reduce the draugh
If a flue damper is fitted it shall be of a type, which does not block the flue totally. The damper shall be easy to operate and incorporate an aperture within the blade, which in a continuous area occupies at least 20 cm2 or 3 % of the cross-sectional area of the blade if this is greater.
The position of the damper shall be recognizable from the setting of the device.
If a draught regulator is fitted the minimum cross sectional area requirement shall not be applicable but the device shall be easily accessible for cleaning.

ENGLISH

Assembly of flue pipe

The product is assembled for a top outlet as standard.

Fig. 13 Assembling the flue pipe

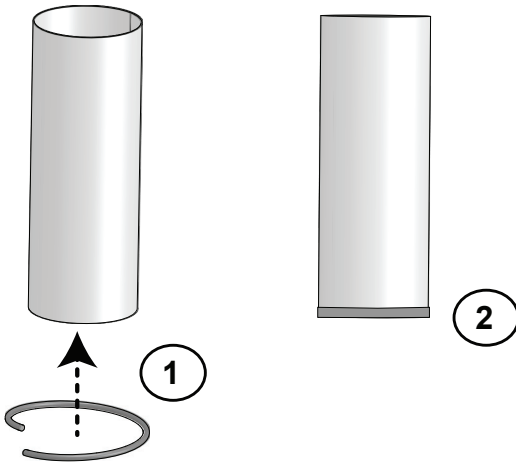

1. Pull off the protective paper from the supplied gasket and attach it to the outside of the flue pipe
2. Insert the flue pipe into the smoke outlet.

Flue pipe is installed in the same way for top and rear outlet.

4.6 Performance check

Once the product has been assembled, always check the control handles. These should move easily and work in a satisfactory manner.

Fig. 14 The Jøtul F 602 ECO is equipped with the following operating options:

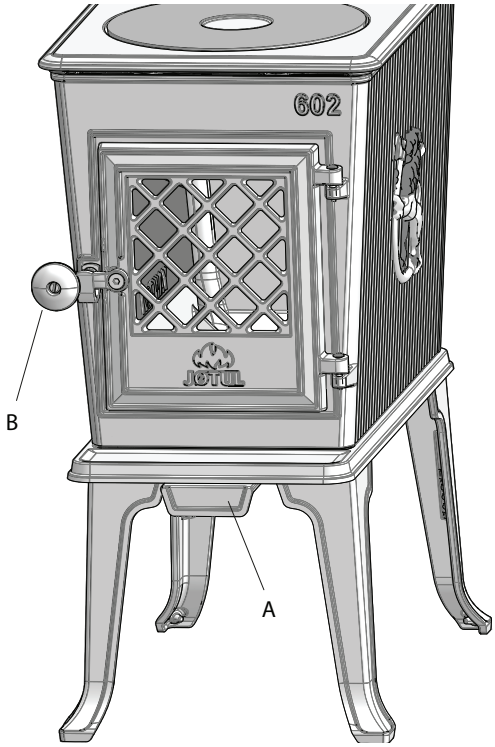

Air and ignition vent (A). Adjusts in and out in the horizontal direction (see fig. 15-17)
Door handle (B). Opens by lifting the handle up and pulling out.

Valve adjustment

Fig. 15

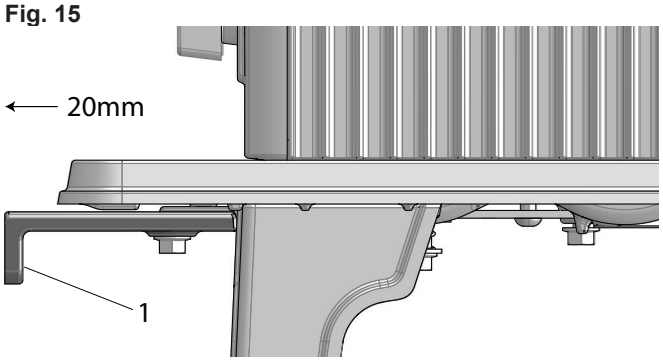

1. Pulled out completely : Open (used during ignition)

Fig. 15b

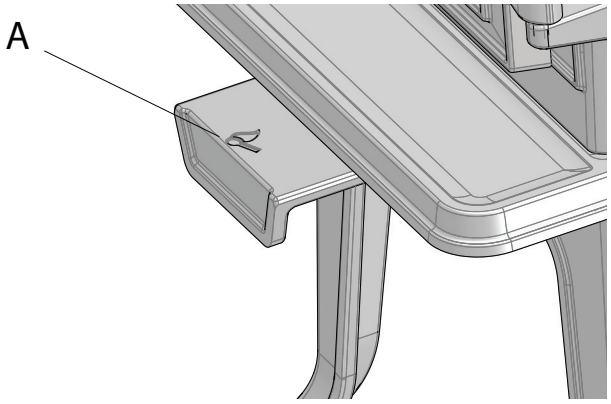

When the match symbol (A) is displayed, the valve is open for ignition.

Fig. 16

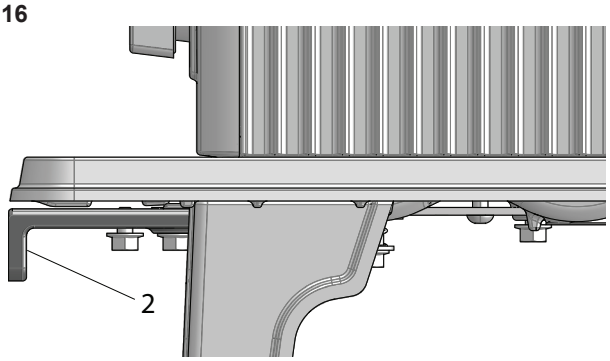

2. Edge-to-edge with ash lip: Max air after ignition

Fig. 17

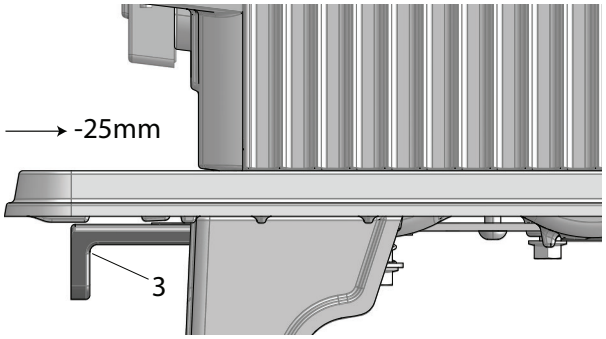

3. Pushed in: **Closed**

4.7 Use

- Open the air vent and the ignition vent by pulling it out all the way (A). If necessary, keep the door slightly open. (Use a glove, for example, as the handle can become hot.)
- Place two medium sized logs in/out on each side of the base. N.B. In order to avoid sooting on the glass, it is important that the log is not placed adjacent to the glass on the product.
- Put 2-3 briquettes (or birch bark) between these and add some kindling wood in a criss-cross pattern on top and light the newspaper.
- Gradually increase the size of the woodlogs.
- Finally, place a medium-sized log on the top of the pile.
- Then regulate the rate of combustion to the desired level of heating by adjusting the air vent.
- Close the stove door. It must always be closed when the fire is lit.
- Operation with the air controls or appliance dampers open can cause excess smoke. The appliance must not be operated with air controls, appliance dampers or door left open except as directed in the instructions.
- Operation with the door open can cause excess smoke. The appliance must not be operated with the appliance door left open except as directed in the instructions.

Fig. 18

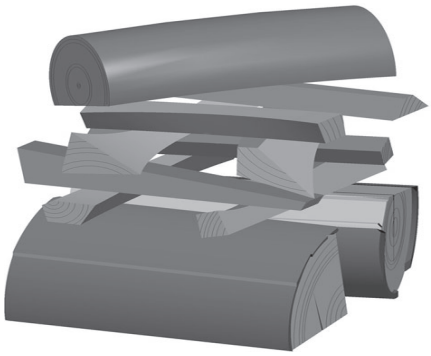

Adding firewood

Stoke the stove frequently but only add small amounts of fuel at a time. If the stove is filled too full, the heat created may cause extreme stress in the chimney. Add fuel to the fire in moderation. Avoid smouldering fires as this produces the most pollution. The fire is best when it is burning well and the smoke from the chimney is almost invisible.

If there is insufficient burning material in the firebed to light a new fuel charge, excessive smoke emission can occur. Refuelling must be carried out onto a sufficient quantity of glowing embers and ash that the new fuel charge will ignite in a reasonable period. If there are too few embers in the fire bed, add suitable kindling to prevent excessive smoke.

Danger of overheating

The fireplace must never be used in a manner that causes overheating.

Overheating occurs when there is too much fuel and/or too much air so that too much heat develops. A sure sign of overheating is when parts of the fireplace glow red. If this happens, reduce the air vent opening immediately.
Seek professional advice if you suspect that the chimney is not drawing properly (too much/too little draught). For further information, see **«4.0 Installation» (Chimney and flue pipe).**

Condensation

Condensation in a fireplace / flue pipe / chimney may occur. This may be caused by moist firewood or differences in temperature in the fireplace and environment.

Condensed water coming from the fireplace appears as a black, tar-like liquid. This should be wiped off immediately to avoid discoloration of the fireplace, floor or surrounding building components.

It is important to get the wood burning quickly to avoid condensation
.
If the condensation continues, mineral sand can be placed on the bottom plate.

Removing the ashes

- Only remove ashes when the fireplace is cold.
- Use a showel to scrape the ashes out, but always leave a little ash at the bottom of the combustion chamber as a protective insulating layer.
- Ashes should be placed outside in a metal container.

5.0 Daily use

Odours when using the fireplace for the first time

Odours when using the fireplace for the first time
When the fireplace is used for the first time, it may emit an irritating gas which may smell slightly. This happens because the paint dries.The gas is not toxic but the room should be thoroughly ventilated. Let the fire burn with a high draught until all traces of the gas have disappeared and no smoke or odours can be detected.

Heating advice

NB: Logs that have been stored outdoors or in a cold room should be brought indoors 24 hours before use to bring them up to room temperature.
There are various ways of heating the stove but it is always important to be careful about what you put in the stove. See the section on **“Wood quality”**.

NB! Combustion with too low air supply can lead to poor combustion, poorer efficiency, high particulate emissions, black carbon and other health and climate hazardous compounds.

ENGLISH

Wood quality

By quality wood we mean most well-known types of wood such as birch, spruce and pine.

The logs should be dried so that the moisture content is no more than 20%.
To achieve this, the logs should be cut during the late winter. They should be split and stacked in a way that ensures good ventilation. The wood stacks should be covered to protect the logs from rain. The logs should be brought indoors during early autumn and stacked/stored for use in the coming winter.

Be especially careful never to use the following materials as fuel in your fireplace:

- Household rubbish, plastic bags, etc.
- Painted or impregnated timber (which is extremely toxic).
- Laminated wooden planks.
- Driftwood

These may harm the product and are also pollutants.

NB: Never use petrol, paraffin, methylated spirit or similar liquids to light the fire. You may cause serious injury to yourself and damage to the product.

Wood consumption

Jøtul F 602 ECO has a nominal heat output of **ca. 5 kW**. Use of wood, with nominal heat emission: Approx. **1,5 kg/h.** The size of the logs should be:

Kindling:
Length: 25-33 cm
Diameter: 5 cm
Amount per fire: 5-8 pieces

Firewood (split logs):
Length: Ca 19 - 33 cm
Diameter: Approx. 4-7 cm
Intervals for adding wood: Approximately every 50 minutes
Size of the fire: 1.4 kg (nominal efficiency)
Amount per load: 2 pieces

The given testresults have been obtained by loading 2 logs á 19 cm, total weight of 1,4 kh.The logs are laid across. Valve set for about 40 % air, about 10 mm in from the edge.

The maximum amount of fuel specified in this manual should not be exceeded, overloading can cause excess smoke.

5.1 How wind and weather affect the stove

The performance of the stove can be affected considerably by the wind acting on the chimney at different strengths. It may therefore be necessary to adjust the air supply to ensure good combustion performance. It might also be a good idea to install a damper in the flue pipe so that the chimney draught can be regulated according to the strength of the wind.

Fog and mist can have a significant impact on the chimney draught and it might be necessary to use other combustion air settings to ensure good performance.

5.2 The importance of the chimney

The chimney is the engine that drives the fireplace and it's essential to have a good chimney in order for the fireplace to function properly.

The draught in the chimney creates a vacuum in the stove.
The combustion air is also used for the airwash system that keeps the window clear of soot.

The draught in the chimney is caused by the difference in temperatures inside and outside the chimney. The greater the temperature difference, the better the draught in the chimney. It is therefore important to allow the chimney to reach operating temperature before adjusting the air vents to restrict combustion in the stove (a brickwork chimney takes longer to reach operating temperature than a steel chimney).
It is particularly important to reach operating temperature as quickly as possible on days on which the draught in the chimney is poor due to unfavourable wind and weather conditions. Make sure the fuel ignites as quickly as possible. Practical tip: Chop the wood into much smaller pieces and use an extra firelighter.

NB: If the stove has not been used for some considerable time, it is important to check the chimney pipe for blockage.

5.3 General notes

PLEASE NOTE! Parts of the wood-burning stove, especially the outer surfaces, become hot during use. Due care should be exercised.

- Wear a glove when handling the stove
- Never empty ashes into a flammable container. Ashes can contain glowing embers long after you finish operating the stove
- Keep the combustion chamber closed except during ignition, refuelling and removal of residue material to prevent fume spillage
- Keep the air intake and output holes free from any accidental blokage while the stove is in use
- When the stove is not in use you can close the dampers to avoid a draught through the stove
- If the stove has not been used for some time, you should check the flue passageways for potential blockages before relighting
- We advise you strongly not to use the stove over night. The stove is not suited for this purpose
- NOTE: Never place flammable material in the radiation zone of the stove!

6.0 Maintenance

6.1 Cleaning the glass

The product is equipped with an air wash for the glass. Air is sucked in through the air vent on the top of the product and down along the inside of the glass.

However, some soot will always stick to the glass, but the quantity will depend on the local draught conditions and adjustment of the air vent. Most of the soot layer will normally be burned off when the air vent is opened all the way and a fire is burning briskly in the fireplace.

Good advice! For normal cleaning, moisten a paper towel

with warm water and add some ash from the burn chamber. Rub it over the glass and then clean the glass with clean water. Dry well. If it is necessary to clean the glass more thoroughly we recommend using a glass cleaner *(follow the instructions on the bottle).*

6.2 Cleaning and soot removal

Soot deposits may build up on the internal surfaces of the fireplace during use. Soot is a good insulator and will therefore reduce the fireplace's heat output. If soot deposits accumulate when using the product, they can be easily removed by using a soot remover.

In order to prevent a water and tar layer from forming in the fireplace you should regularly allow the fire to burn hot in order to remove the layer. An annual internal cleaning is necessary to get the best heating effect from the product. It is a good idea to do this in connection with the sweeping of the chimney and flue pipes.

6.3 Sweeping of flue pipes to the chimney

On certain free-standing fireplaces the top plate can be lifted off and the pipe swept through the top.
Otherwise, flue pipes must be swept through the flue pipe sweeping hatch or through the product's door opening. Then, the baffle must be removed.

6.4 Inspection of the fireplace

Jøtul recommends that you personally inspect your fireplace carefully after sweeping/cleaning. Check all visible surfaces for cracks. Also check that all joints are sealed and that the gaskets are in the correct position. Any gaskets showing signs of wear or deformation must be replaced.
Thoroughly clean the gasket grooves, apply ceramic glue (available from your local Jøtul dealer), and press the gasket well into place. The joint will dry quickly.

6.5 Exterior maintenance

Painted products may change colour after several years usage. The surface should be cleaned and brushed free of any loose particles before new paint is applied.

Important! Never place anything on the top plate of the stove. This could cause permanent damage to the paint or enamel.

7.0 Service

Any unauthorised modifications to the product are prohibited! Only original spare parts may be used!

Fig. 19

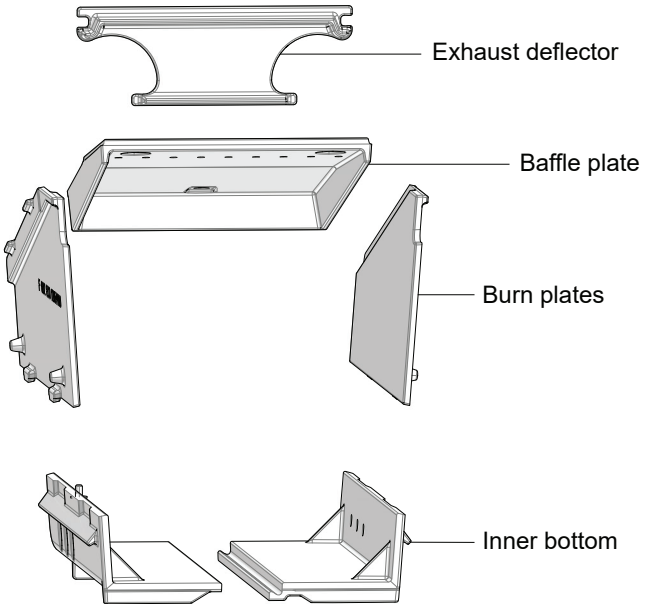

7.1 Replacing parts in the burn chamber

Use tools with great care.

Replacing the baffle plate

Fig. 20 Removing the hot plate and smoke outlet cover

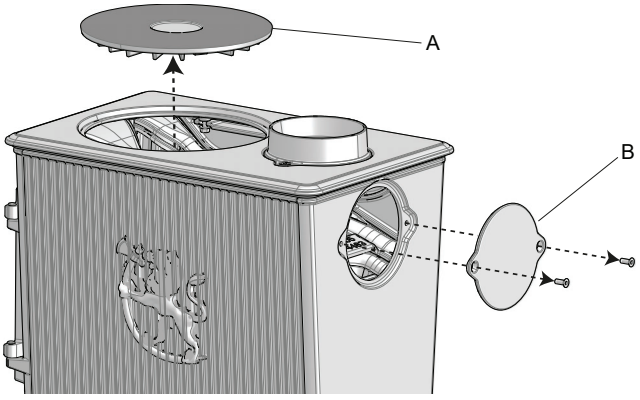

1. Lift the hot plate (A)
2. Unscrew the smoke outlet cover (B)

Fig. 21 Loosen nuts on the baffle plate

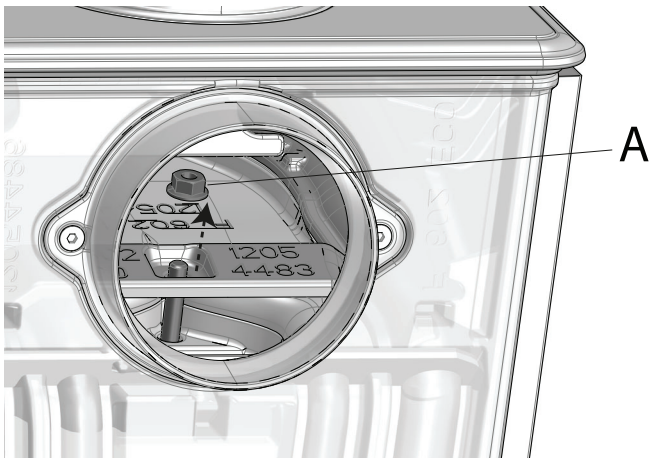

3. Loosen the nut (A) on top/back of the baffle plate

Fig. 22 Loosen nuts on the baffle plate

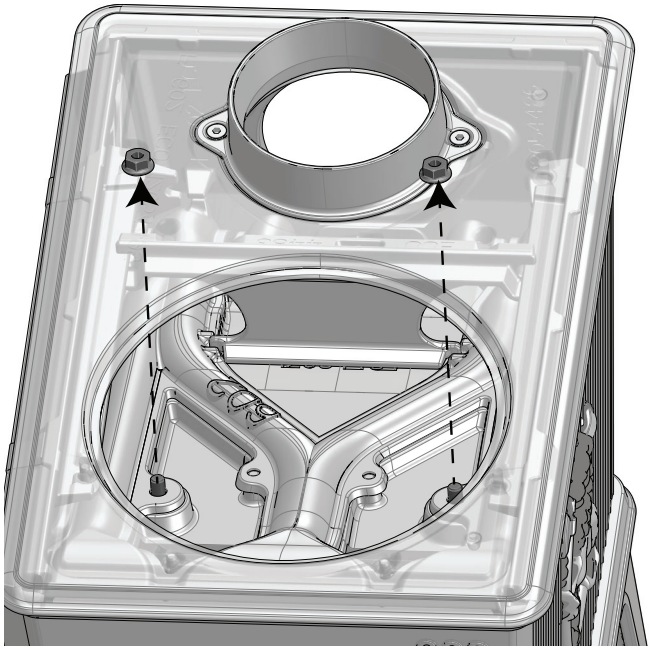

4. Loosen the two nuts on top of the baffle plate
5. Remove the left and right burn plate(see figur 26)

Fig. 23 Unscrew the screws in the baffle plate

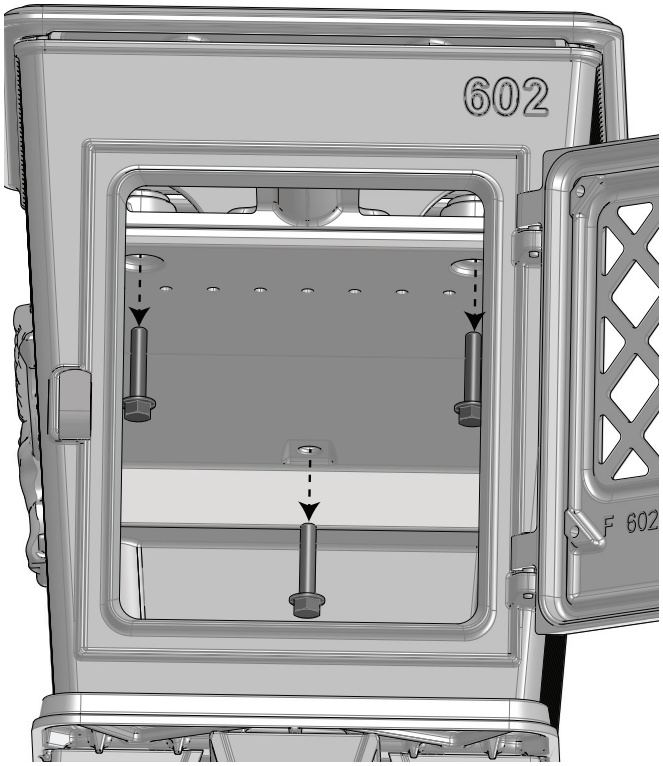

6. Unscrew the three screws holding the baffle plate in place.

Fig. 24 Removing the baffle plate

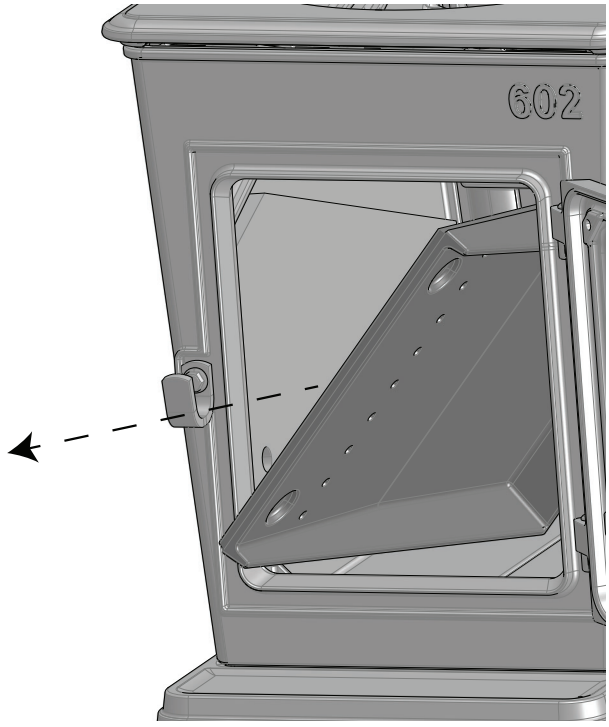

7. Tilt the baffle plate out of the stove.
8. When refitting, follow the same procedure in reverse order. (first see fig. 25)

Fig. 25 Replace gasket against backplate

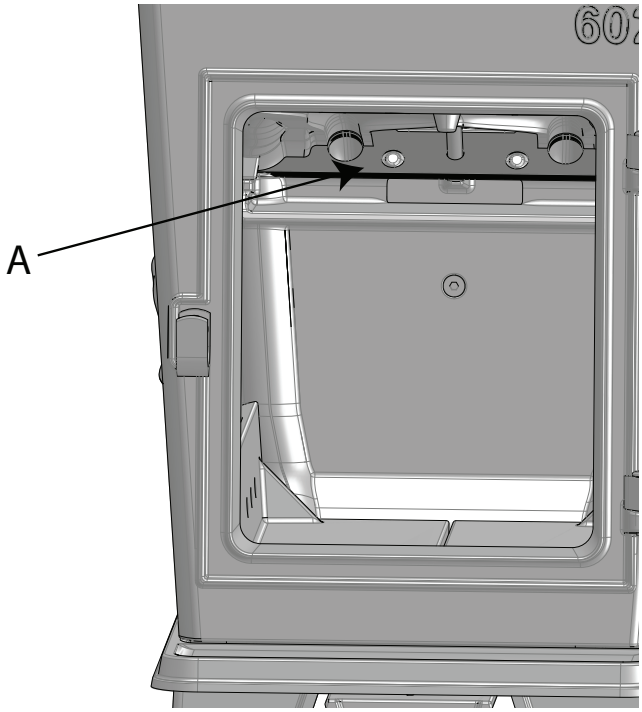

9. The gasket (A) will break when removing the baffle plate. This must be replaced by putty / fiber pulp when reassembling a new baffle plate.

7.2 Replacing the burn plates/inner bottom

Fig. 26 Replacing the burn plates

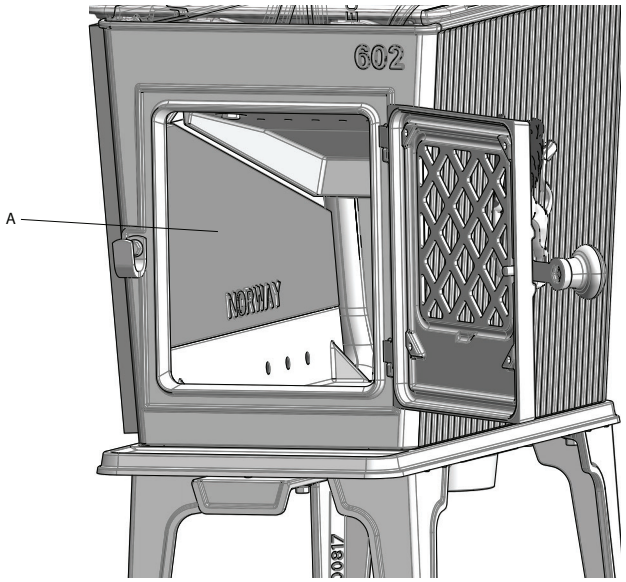

1. Remove the burn plate **(A)** by lifting and tilting the burn plate out of the stove.This is done on both sides of the combustion chamber. When refitting, follow the same procedure in reverse order.

Fig. 27 Replacing the inner bottom

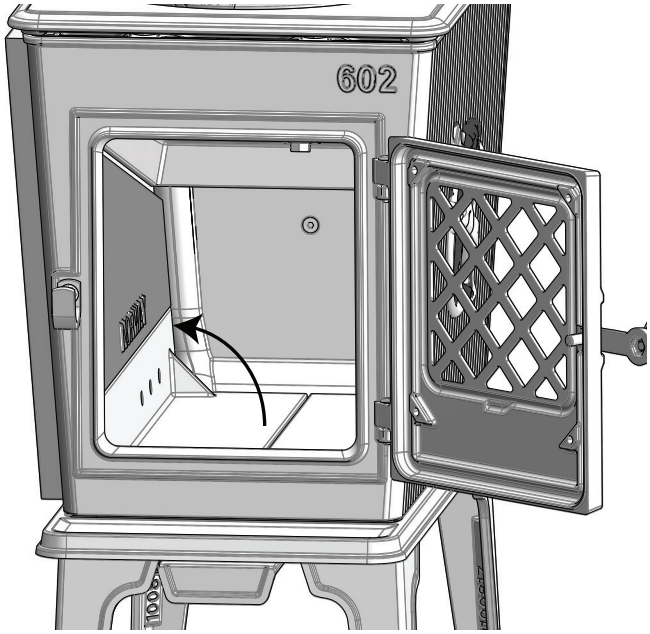

1. Tilt up the left inner bottom, then tilt it out of the stove. Do the same with the right inner bottom.When refitting, follow the same procedure in reverse order.

Fig. 28 Replacing the exhaust reflector

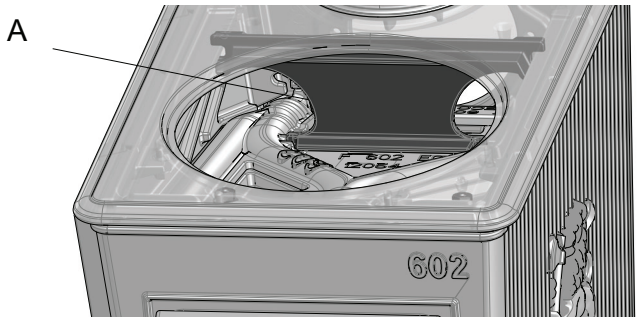

1. Remove the hot plate (see fig. 20)
2. Lift the exhaust reflector (A) up from the slot and tilt it out.
1. When refitting, follow the same procedure in reverse order.

8.0 Operational problems - troubleshooting

Poor draught

Check the length of the chimney and that it complies with national laws and regulations. (See also **«2.0 Technical data»** and **«4.0 Installation» (Chimney and flue pipe)** in the installation manual for information.)
Make sure that the minimum cross section on the chimney is according to **«2.0 Technical data»** in the installation manual.
Make sure that there is not anything preventing the smoke gasses from escaping: branches, trees, etc.
Upon suspicion of excessive/poor draught in the chimney, seek professional help for measurement and adjustment.

The fire extinguishes after a while

- Make sure that the firewood is sufficiently dry.
- Find out whether there is negative pressure in the house, close mechanical fans and open a window close to the fireplace.
- Check that the air vent is open.
- Check that the flue outlet is not clogged by soot.

Unusual amount of soot accumulates on the glass

Some soot will always stick to the glass, but the quantity depends on:

- Moisture in the fuel.
- The local draught conditions.
- Air vent opening.

Most of the soot will normally burn off when the air vent is opened all the way and a fire is burning briskly in the fireplace.

9.0 Optional equipment

9.1 External air supply cover

Cat. no. 10055054

9.2 Heat shield

Cat. no. 10054507

9.3 Hotplate Ø125

Cat. no. 51054941

9.4 External air adaptor

Cat. no. 51054938

9.5 External air kit Ø80

Cat. no. 51047509

10.0 Recycling

10.1 Recycling packaging

Your fireplace is delivered with the following packaging:

- A wooden pallet that can be cut up and burned in the fireplace.
- Cardboard packaging that should be taken to a local recycling facility.
- Plastic bags that should be taken to a local recycling facility.

10.2 Recycling the fireplace

The fireplace is made of:

- Metal that should be taken to a local recycling facility.
- Glass that should be disposed of as hazardous waste. The glass in the fireplace must not be placed in a regular source segregation container.
- Vermiculite burn plates that can be disposed of in regular waste containers.

11.0 Guarantee terms

1. Our guarantee covers:

Jøtul AS guarantees that the external cast-iron parts are free from defects in materials or manufacturing at the time of purchase. You may extend the guarantee on the external cast-iron parts to 25 years from the date of delivery by registering the product on jotul.com, and print out the extended guarantee card within three months of purchase. We recommend that the guarantee card be kept together with the receipt. Jøtul AS also guarantees that steel plate parts are free from defects in materials or manufacturing at the time of purchase for a period of 5 years from the date of delivery.

The guarantee applies on the condition that the stove has been installed by a qualified installer in accordance with applicable laws and regulations and Jøtul's installation and operating instructions. Repaired products and replacement items are guaranteed within the original guarantee period.

2. The guarantee does not cover:

2.1. Damage to consumables such as burn plates, fire grates, flue baffles, gaskets and similar as these deteriorate over time due to normal wear and tear.
2.2. Damage caused as a result of improper maintenance, overheating, use of unsuitable fuel (e.g of unsuitable fuel are, but not limited to driftwood, impregnated wood, plank offcuts, chipboard) or too moist / wet wood.
2.3. Installation of optional extras for the purpose of rectifying local draught conditions, air supply or other circumstances beyond Jøtul's control.
2.4. Cases involving alterations / modifications to the fireplace without Jøtul's consent or the use of non-original parts.
2.5. Damage caused during storage at a distributor, transport from a distributor or during installation.
2.6. Products sold by unauthorized sellers in areas where Jøtul operates a selective distribution system.
2.7. Associated cost (e.g.but not limited to, transport, manpower, travel) or indirect damages.

Pellets stoves, glass, stone, concrete, enamel and paint finish (e.g. but not limited to chipping, cracking, bubbling or discolouration and crazing) are applicable to the national legislation governing the sale of consumer goods. This guarantee is valid for purchases made within the territory of the European Economic Area. All guarantee inquiries must be addressed to your local authorized Jøtul dealer within a reasonable amount of time, which shall not be later than 14 days from the date on which the fault or defect first became apparent. See list of importers and dealers on our web site www.jotul.com.

If Jøtul is unable to meet the obligations outlined in the above guarantee terms, Jøtul will offer a replacement product with a similar heating capacity free of charge.

Jøtul reserve the right to decline of any replacement of parts or service in the event that the guarantee is not registrated online. This guarantee does not affect any rights under applicable national legislation governing the sale of consumer goods. The national complaint right applies from the purchase date and only in exchange for a receipt / serial number.